Model 5270/5280

GAUSS / TESLA METER

Instruction Manual

F.W. BELL®

www.fwbell.com

Manual 095-415200-01
Rev. A
OECO, LLC
All rights reserved.

CE

Table of Contents

Section -1 Introduction

UNDERSTANDING FLUX DENSITY..... 1-1
MEASUREMENT OF FLUX DENSITY 1-2
PRODUCT DESCRIPTION 1-4
APPLICATIONS 1-4

Section - 2 Specifications

SPECIFICATIONS 2-1
MODEL 5270 / 5280 SPECIFICATIONS 2-2
LITHIUM-ION BATTERY 2-3
STANDARD TRANSVERSE PROBE 2-4
STANDARD AXIAL PROBE 2-5
LOW FIELD AXIAL PROBE 2-6
ZERO FLUX CHAMBER 2-7

NOTICE:

See Pages 3-1 and 3-2 for

SAFETY instructions prior to first use!

Section - 3 Operating Instructions

OPERATOR SAFETY 3-1
INSTRUMENT PREPARATION 3-3
OPERATING FEATURES..... 3-4
POWER-UP 3-5
POWER-UP SETTINGS 3-6
LOW BATTERY CONDITION 3-6
HOME SCREEN 3-7
METER SETTINGS 3-8
BRIGHTNESS 3-9
DARK MODE 3-9
AUDIO 3-9
DATE AND TIME 3-10
IDLE POWER-OFF TIMER 3-10
LANGUAGES 3-11
TOUCH SCREEN CALIBRATION 3-11
ERROR BUFFER 3-12
DEVICE INFO 3-12
AC OR DC MEASUREMENT SELECTION 3-13
UNITS OF MEASUREMENT SELECTION 3-13
RANGE SELECTION 3-14
OVERRANGE CONDITION 3-14
HOLD MODE SELECTION 3-15
MIN/MAX HOLD USAGE 3-16
PEAK HOLD USAGE 3-16
ZERO FUNCTION 3-17
AUTOMATIC ZERO FUNCTION 3-18
MANUAL ZERO FUNCTION 3-20
RELATIVE MODE 3-22
AUTOMATIC RELATIVE MODE 3-23
MANUAL RELATIVE MODE 3-24
MEASUREMENT LOG 3-25
ALERT RANGING MODE 3-26
ANALOG OUTPUT FUNCTION 3-28
ANALOG OUTPUT USAGE 3-28
SOURCES OF MEASUREMENT ERRORS 3-30
MORE DETAILS ON AC MODE OPERATION 3-31
MORE DETAILS ON DC MODE OPERATION 3-32
BATTERY REMOVAL 3-33
BATTERY INSTALLATION 3-34

Table of Contents, Cont.

Section - 4 Remote Operation

USB INTERFACE CONNECTION 4-1
REMOTE COMMAND STANDARDS 4-1
COMMAND FORMAT 4-1
ERROR BUFFER 4-2
STATUS REGISTERS 4-2
INFORMATION FOR REMOTE OPERATION 4-3
OTHER GENERAL 5280 FILE INFORMATION 4-4
STATUS BYTE AND REQUEST FOR SERVICE (RQS) 4-5
STANDARD EVENT REGISTER 4-7
MEASUREMENT EVENT REGISTER 4-8
OPERATION EVENT REGISTER 4-8
QUESTIONABLE EVENT REGISTER 4-8
“COMMON” COMMAND SYNTAX 4-9
“COMMON” COMMANDS 4-10
SCPI COMMAND SYNTAX 4-12
SCPI COMMANDS 4-13
ERROR MESSAGES AND COMMANDS 4-14
STATUS COMMANDS 4-15
MODE COMMANDS 4-17
RANGE COMMANDS 4-18
HOLD COMMANDS 4-19
ZERO COMMAND 4-20
RELATIVE COMMANDS 4-20
MEASUREMENT COMMAND 4-20
ANALOG OUTPUT COMMAND 4-21
OPERATION COMPLETE STATUS 4-22
PC5200.EXE – REMOTE PC CONTROL 4-23
MODEL 5200 ERROR CODES 4-25

WARRANTY

List of Illustrations

Figure 1-1 Flux Lines of a Permanent Magnet 1-1
Figure 1-2 Hall Generator 1-2
Figure 1-3 Hall Probe Configurations 1-3
Figure 2-1 Standard Transverse Probe 2-4
Figure 2-2 Standard Axial Probe 2-5
Figure 2-3 Low Field Axial Probe 2-6
Figure 2-4 Zero Flux Chamber 2-7
Figure 3-1 Probe Electrical Warning 3-1
Figure 3-2 Battery Location 3-3
Figure 3-3 Connections 3-3
Figure 3-4 Keypad 3-4
Figure 3-5 Missing Probe Indication 3-5
Figure 3-6 Power-Up Display 3-5
Figure 3-7 5280 Home Screen 3-7
Figure 3-8 5270 Home Screen 3-7
Figure 3-9 5200 Settings 1 3-8
Figure 3-10 5200 Settings 2 3-8
Figure 3-11 5200 Settings 3 3-8
Figure 3-12 5200 Settings 4 3-8
Figure 3-13 Time & Date Settings Page 3-10
Figure 3-14 Example About Page 3-12
Figure 3-15 Home Screen Info Box – Not Zeroed 3-18
Figure 3-16 Zero Auto Settings Page 3-18
Figure 3-17 Zero Manual Settings Page 3-20
Figure 3-18 Home Screen Info Box - Relative 3-23
Figure 3-19 Measurement Log 3-25
Figure 3-20 Adjusting the DC Offset of the Analog Output 3-29
Figure 3-21 Probe Output versus Flux Angle 3-30
Figure 3-22 Probe Output versus Distance 3-30
Figure 3-23 Flux Density Variations in a Magnet 3-31
Figure 3-24 Battery Removal 3-33
Figure 3-25 Battery Polarity 3-34
Figure 3-26 Battery Installation 3-34
Figure 4-1 Condition, Event, and Enable Registers 4-5
Figure 4-2 Status Byte and Enable Registers 4-5
Figure 4-3 Standard Event Registers 4-7
Figure 4-4 Measurement Event Registers 4-8
Figure 4-5 Operation Event Registers 4-8
Figure 4-6 Questionable Event Registers 4-8
Figure 4-7 PC5200 Connection Issue Error Box 4-23
Figure 4-8 PC5200 Logging 4-23
Figure 4-9 PC5200 Logging Interface 4-24

Statement regarding improvements to 5200 Series Gaussmeters

The 5200 Series Gauss / Tesla Meters have improved user interface with the same accuracy, measurement features, and digital signal processing technology.

Summary of changes:

- 4.3” LCD touch-screen with a new user interface.
- Settings controls for sound, screen brightness, and dark mode.
- Rechargeable Li-Ion battery with 10 to 14 hours typically on a single charge.
- USB-C 2.0 connection for power/charging and for remote PC control
- 512 kBit internal memory with internal data logging and storage (5280)
- Audio/visual alert when in range (5280)
- Ergonomic design

Section 1
Introduction

UNDERSTANDING FLUX DENSITY

Magnetic fields surrounding permanent magnets or electrical conductors can be visualized as a collection of magnetic *flux* lines, lines of force existing in the material that is being subjected to a magnetizing influence. Unlike light, which travels away from its source indefinitely, magnetic flux lines must eventually return to the source. Thus, all magnetic sources are said to have two *poles*. Flux lines are said to emanate from the “north” pole and return to the “south” pole, as depicted in Figure 1-1.

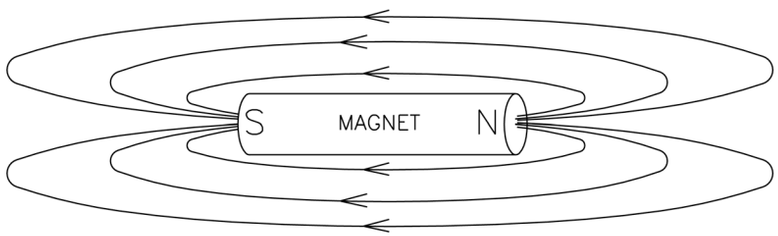

Figure 1-1
Flux Lines of a Permanent Magnet

One line of flux in the CGS measurement system is called a *maxwell* (M), but the *weber* (W), which is 108 lines, is more commonly used. Flux density, also called magnetic induction, is the number of flux lines passing through a given area. It is commonly assigned the symbol “*B*” in scientific documents. In the CGS system, a *gauss* (G) is one line of flux passing through a 1 cm area. The more commonly used term is the *tesla* (T), which is 10,000 lines per cm. Thus,

1 tesla = 10,000 gauss
1 gauss = 0.0001 tesla

Magnetic field strength is a measure of force produced by an electric current or a permanent magnet. It is the ability to induce a magnetic field “*B*”. It is commonly assigned the symbol “*H*” in scientific documents. The unit of “*H*” in the CGS system is an *oersted* (Oe), but the *ampere/meter* (Am) is more commonly used. The relationship is:

1 oersted = 79.6 ampere/meter
1 ampere/meter = 0.01256 oersted

It is important to know that magnetic field strength and magnetic flux density are not the same. Magnetic field strength deals with the physical characteristics of magnetic materials, whereas flux density does not. The only time the two are considered equal is in free space (air). Only in free space is the following relationship true:

1 G = 1 Oe = 0.0001 T = 79.6 Am

MEASUREMENT OF FLUX DENSITY

A device commonly used to measure flux density is the *Hall generator.* A Hall generator is a thin slice of a semiconductor material to which four leads are attached at the midpoint of each edge, as shown in Figure 1-2.

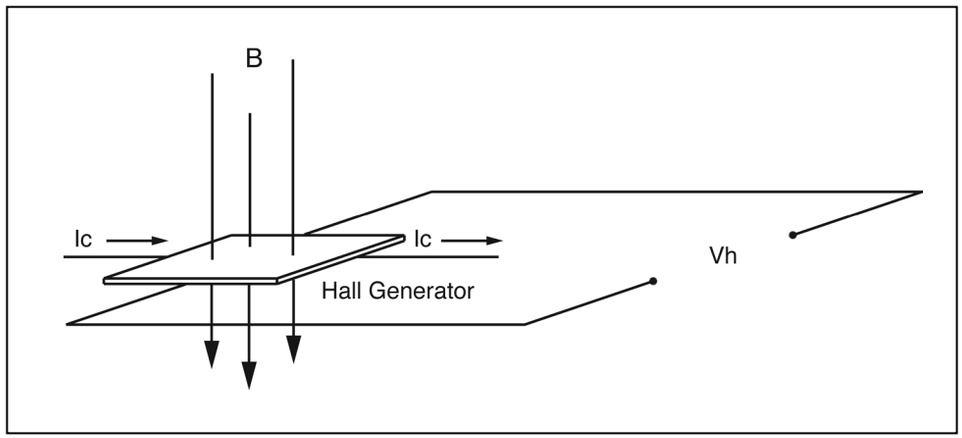

Figure 1-2
Hall Generator

A constant current (Ic) is forced through the material. In a zero magnetic field, there is no voltage difference between the other two edges. When flux lines pass through the material, the path of the current bends closer to one edge, creating a voltage difference known as the Hall voltage (Vh). In an ideal Hall generator, there is a linear relationship between the number of flux lines passing through the material (flux density) and the Hall voltage.

The Hall voltage is also a function of the *direction* in which the flux lines pass through the material, producing a positive voltage in one direction and a negative voltage in the other. If the same number of flux lines pass through the material in either direction, the net result is zero volts. This sensitivity to flux direction makes it possible to measure both static (dc) and alternating (ac) magnetic fields.

The Hall voltage is also a function of the *angle* at which the flux lines pass through the material. The greatest Hall voltage occurs when the flux lines pass perpendicularly through the material. Otherwise, the output is related to the cosine of the difference between 90º and the actual angle.

The sensitive area of the Hall generator is generally defined as the largest circular area within the actual slice of the material. This *active area* can range in size from 0.2 mm (0.008”) to 19 mm (0.75”) in diameter. Often the Hall generator assembly is too fragile to use by itself so it is often mounted in a protective tube and terminated with a flexible cable and a connector. This assembly, known as a Hall probe, is generally provided in two configurations:

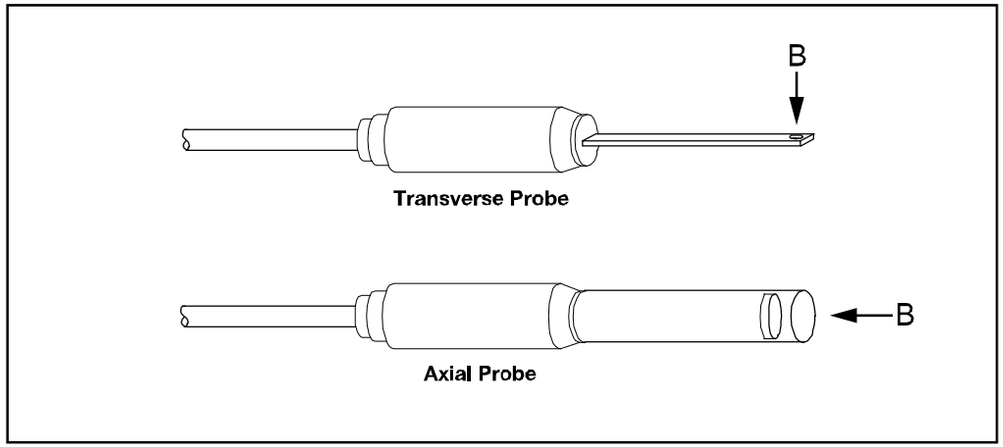

Figure 1-3
Hall Probe Configurations

In “transverse” probes, the Hall generator is mounted in a thin, flat stem, whereas in “axial” probes the Hall generator is mounted in a cylindrical stem. The axis of sensitivity is the primary difference, as shown by “*B*” in Figure 1-3. Generally, transverse probes are used to make measurements between two magnetic poles such as those in audio speakers, electric motors and imaging machines.
Axial probes are often used to measure the magnetic field along the axis of a coil, solenoid or traveling wave tube. Either probe can be used where there are few physical space limitations, such as in geomagnetic or electromagnetic interference surveys.

Handle the Hall probe with care. Do not bend the stem or apply pressure to the probe tip as damage may result. Use the protective cover when the probe is not in use.

PRODUCT DESCRIPTION

The *MODEL 5270 / 5280 GAUSS / TESLAMETER* is a portable instrument that utilizes a Hall probe to measure magnetic flux density in terms of gauss, tesla or ampere/meter. The measurement range is from 0.01 mT (0.1 G or 0.01 kA/m) to 3.000T (30.00 kG or 2388 kA/m) for the 5280, and 2.000T (20.00 kG or 1592 kA/m) for the 5270. The instrument is capable of measuring static (DC) and alternating (AC) magnetic fields.

The *MODEL 5270 / 5280* consists of a hand-held meter and various detachable Hall probes. The meter operates on one rechargeable 3.6 volt lithium ion battery and can also be powered by an external supply through the USB C port. A retractable stand allows the meter to stand upright on a flat surface. The large display is visible at considerable distances. The instrument is easily configured using the touchscreen.

Three measurement ranges can be selected or the meter can automatically select the best range based on the present flux density being measured. A “zero” function allows the user to remove undesirable readings from nearby magnetic fields (including earth’s) or false readings caused by initial electrical offsets in the probe and meter. Included is a “zero flux chamber” which allows the probe to be shielded from external magnetic fields during this operation. Another feature called “relative mode” allows large flux readings to be suppressed so that small variations within the larger field can be observed directly. Both the “zero” and “relative” adjustments can be made manually or automatically.

Other features include three “hold” modes, allowing either the arithmetic maximum, minimum or instantaneous peak values to be held indefinitely until reset by the user. An analog signal is available from a standard BNC connector that is representative of the magnetic flux density signal and is calibrated to 3 Volts full scale in dc mode or 3 VRMS in AC mode. This output can be connected to a voltmeter, oscilloscope, recorder or external analog to digital converter.

The meter can be fully configured and flux density readings acquired from a remote computer or PLC using the USB communications port.

The meter, probes and accessories are protected when not in use by a sturdy carrying case.

APPLICATIONS

• Sorting or performing incoming inspection on permanent magnets, particularly multi-pole magnets
• Testing audio speaker magnet assemblies, electric motor armatures and stators, transformer lamination stacks, cut toroidal cores, coils, and solenoids
• Determining the location of stray fields around medical diagnostic equipment
• Determining sources of electromagnetic interference
• Locating flaws in welded joints
• Inspection of ferrous materials
• Field mapping
• Inspection of magnetic recording heads

Section 2
Specifications

		5270	5280
Ranges:	**Ultra Low Probe**	**1 G**	**1 G**
	Low	**200 G**	**300 G**
	Mid	**2 kG**	**3 kG**
	High	**20 kG**	**30 kG**
Resolution:	**Ultra Low Probe**	**1 mG**	**1 mG**
	Low	**0.1 G**	**0.1 G**
	Mid	**1.0 G**	**1.0 G**
	High	**10 G**	**10 G**

Specifications continued on next page

SPECIFICATIONS, MODEL 5270 & 5280 GAUSS / TESLAMETER without probe, 23 ±3ºC, RH <85%

Accuracy, ±% of Reading ± counts	**5270**	**5280**
DC MODE, Low Range:	1.25+ 4	0.8 + 4
Mid & High Ranges:	1.00 + 3	0.6 + 3
AC MODE (for sinewave >6G or 0.6mT) {1}		
10 - 20 Hz	3.50 + 8	3.0 + 8
20 - 20,000 Hz:	2.50 + 5	2.0 + 5
20 kHz to 25 kHz (1x axial probe only)	N/A	3.0 + 5

{1} additional ±8 counts tolerance for signals
< 4% of lowest range and >2 kHz

Accuracy, Analog Output of Model 5270/5280 (±% of Reading ± mV)

DC MODE Low Range:	0.75 + 6
Mid & High Ranges:	0.50 + 5
AC MODE: (for sinewave >6 G or 0.6 mT) {2}	
10 – 20 Hz	3.00 + 8
20 – 5000 Hz	2.50 + 5
Analog output -3dB point is approximately 22 kHz	

Delay Time: 30 µs
Sample Rate: 8µs with variable moving average filtering
Risetime: DC Mode = 250 µs DC peak hold = 60 µs
AC Mode and AC Peak Hold; from 30 µs to 2 ms depending on freq.

{2} additional ±8 mV tolerance for signals
< 4% of lowest range and >2 kHz

Battery Type: One Rechargeable 21700 Li-ion with 4000 mAH
Battery Life: 8 to 15 hours (brightness dependent)
Battery Charging Time: 120+ minutes with 1 A charger
(quickest charging when OFF or with lowest brightness setting)
Battery Charging Port: USB-C 2.0
Drop Test: 1 Meter drop per IEC 61010-1:2010
Analog Output Connector: BNC
Operating Temperature: 0 to +45ºC (+32 to +113ºF) Charging
0 to +60ºC (+32 to +140ºF) Not Charging
Storage Temperature: -25 to +70ºC (-13 to +158ºF)
Meter Dimensions: Length: 20.3 cm (8.00 in)
Width: 9.8 cm (3.85 in)
Height: 4.8 cm (1.87 in)
Weight: Meter w/ battery: 443 g (15.6 oz.)
Shipping: 1.6 kg (3.6 lb)
Display: 4.3" TFT Resistive Touch LCD Panel, 480xRGBx272 Px

Probe accuracy must be added to meter accuracy to determine overall accuracy

Warmup Time to Rated Accuracy:	15 minutes
Min / Max Hold Acquisition Time:	DC mode: 100 ms typical AC mode: 700 ms at 10 Hz to 500 ms at 300 Hz 250 ms at 300 - 4000 Hz 100 ms > 4 kHz
Peak Hold Acquisition Time:	DC or AC mode: 128 µs minimum
Analog Output Scaling:	DC mode: ± 3 VDC AC mode: 3 VRMS
Analog Output Noise:	(Hi- Range) 1.5 mVRMS (Mid- Range) 4.5 mVRMS (Low- Range) 15.5 mVRMS
Analog Output Load:	10 kOhm min, 100 pF max.

Accuracy Change with Temperature (not including probe)
0-20ºC and 26-50ºC (typical)
Low Range: ±0.25% + 3.0 counts / ºC
Mid & High Ranges: ±0.02% + 0.2 counts / ºC

Regulatory Information:
Compliance was demonstrated to the following specifications as listed in the official Journal of the European Communities:
EN 61326-1:2021 Electrical equipment for measurement, control and laboratory use EMC requirements

Immunity	**Emissions**
IEC 61000-4-2:2008	CISPR 11:2015+A1:2016+A2:2019
IEC 61000-4-3:2020	IEC 61000-3-2:2018
IEC 61000-4-4:2012	IEC 61000-3-3:2013+A1:2017
IEC 61000-4-5:2014+A1:2017	
IEC 61000-4-6:2013	
IEC 61000-4-8:2009	
IEC 61000-4-11:2004+A1:2017	

Communications Port:
Format: Universal Serial Bus
Connector type: USB-C 2.0
Standards supported: IEEE-1987.2, SCPI-1991
Lines supported: Transmit, receive, common
Cable length: 3 m (9.8 ft.) maximum

Lithium-ion Battery
Samsung, INR21700-40T, 4000mAh, 3.6V Battery

WARNING: Misusing or mishandling a lithium-ion battery may cause a FIRE or EXPLOSION which can result in INJURY or DEATH. You MUST read the safety warnings and resources before purchasing, using, and/or handling batteries.

Description:
The 5200 series Gauss/Tesla meter runs on a rechargeable lithium-ion battery with a rated discharge capacity of 3900 mAh. Depending on usage (primarily screen-brightness), a fully charged battery should be capable of powering a 5200 series Gauss/Tesla meter for 8-15 hours. Standard recharge time when the Gauss/Tesla meter is connected to a power source through the USB-C connector is 120 minutes.

Datasheet and information from date 2018/08/21 (see manufacturer for more information, latest specification details, and revisions):
Abridged: https://download.datasheets.com/pdfs2/2021/4/25/12/28/39/739172/samsu_/manual/samsung-inr21700-40t.pdf
Full: https://www.imrbatteries.com/content/samsung_40T.pdf

Battery Specifications	Battery Operating Conditions
Standard discharge capacity	Min. 4,000mAh - Charge: 0.5C(2A), 4.20V, 0.05C(200mA) cut-off @ RT - Discharge: 0.2C(800mA), 2.5V cut-off @ RT
Rated discharge capacity	Min. 3,900 mAh - Charge:1.5C(6A), 4.20V, 0.025C(100mA)cut-off @RT - Discharge: 10A, 2.5V cut-off @ RT
Nominal voltage	3.6V
Standard charge	CCCV, 2A, 4.20V, 200mA cut-off
Rated charge	CCCV, 6A, 4.20V, 100mA cut-off
Discharge cut-off voltage	2.5V (End of discharge)
Cycle life	Capacity ≥ 2,400mAh @ after 250cycles (60% of the standard capacity @ RT) - Charge: 6A, 4.20V, CCCV 100mA cut-off @ RT - Discharge: 35A , 2.5V cut-off @ RT
Retention characteristics	Capacity recovery (after the storage) ≥ 3,510 mAh (90% of the rated capacity @ RT) - Charge: 6A, 4.20V, CCCV 100mA cut-off @ RT - Storage: 30 days (@ 60℃) - Discharge : 10A , 2.5V cut-off @ RT
Cell weight	70.0g max
Cell dimension	Height: Max 70.30mm Diameter: Max 21.22mm
Operating temperature (Ambient)	Charging: 0 to 45°C (32 to 113°F) Discharging (Normal Use): -20 to 60°C (-4 to 140°F)
Storage temperature* (90% recovery)	1 Year: 0 to 25°C (32 to 77°F) 3 Months: 0 to 45°C (32 to 113°F) 1 Month: 0 to 60°C (32 to 140°F)

NOTE: When battery power is used for the first time, momentarily apply USB power to the meter to activate the battery. This will need to be done any time the battery is disconnected and re-installed.

*It is strongly recommended to store the battery in a dry environment

STANDARD TRANSVERSE PROBE

Model Number: **(5280):** STD18-0404
(5270): STH17-0404

Frequency Bandwidth: **(5280):** 0 to 20 kHz
(5270): 0 to 10 kHz

Offset change with Temperature: ±300 mG / ºC (typical)
Accuracy change with Temperature: -0.05%/ºC (typical)
Operating Temperature Range: 0 to +75ºC (+32 to +167°F)
Storage Temperature Range: -25 to +75ºC (-13 to +167°F)

Model	A ± 0.063”	B	C	D	Material	Corrected Linearity	Sensitivit	Active Area	Operating Temp. Range	Temp. stability (typ)		Frequency Response
										Zero	Calibrate	
STD18-0402	2”	0.158” ±.004	0.046” +.000 -.004	0.040” (NOM)	Fiberglass **see note	0.5%/30kG	1X	0.015" DIA (NOM)	0 to +75ºC (32 to 167°F)	±0.300 Gauss/ºC (typical)	-0.05 % /ºC (typical)	DC to 20kHz
STD18-0404	4”											
STH17-0402	2”					1.0%/20kG						DC to 10kHz
STH17-0402	4”											
HTH17-0604	4”	0.180” ±.004	0.060” +.000 -.004		ALUMINUM 3003 ¾ FH	1.0%/20kG						DC to 10kHz
HTD18-0604	4”					0.5%/30kG						DC to 20kHz
STB1X-0201***	1”	.050” ±.005	.020” MAX	0.030” (NOM)	KAPTON	1.0%/10kG		0.025" DIA (NOM)		±0.200 Gauss /ºC	-0.1% /ºC	DC only

Note: Due to continuous process improvement, specifications are subject to change without notice.
** Prior to late 2006 Transverse Probe Stems were rigid glass epoxy, .150 x .040”. From 2006 to 2014 they were polypropylene, .158 x .045”.
*** Not available for purchase. Existing STB1X-0201 probes can be used with 5200 series meters.

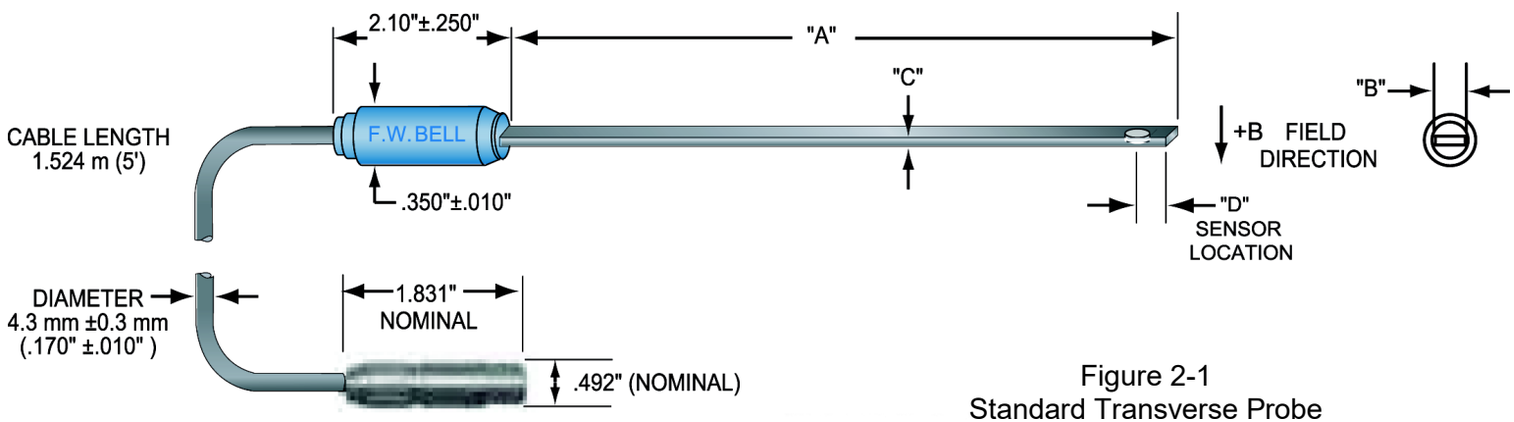

Figure 2-1
Standard Transverse Probe

STANDARD AXIAL PROBE

Model Number: **(5280):** SAD18-1904
(5270): SAH17-1904

Flux Density Range: **(5280):** 0 to ±30 kG (0 to 3 T)
(5270): 0 to ±20 kG (0 to 2 T)

Corrected Linearity: **(5280):** ±0.5% to ±30kG
(5270): ±1.0% to ±20kG

Frequency Bandwidth: **(5280):** 0 to 25 kHz
(5270): 0 to 10 kHz

Offset change with Temperature: ±300 mG / ºC (typical)

Accuracy change with Temperature: -0.05% / ºC (typical)

Operating Temperature Range: 0 to +75ºC (+32 to +167°F)

Storage Temperature Range: -25 to +75ºC (-13 to +167°F)

5280 gaussmeter probes
SAD18-1904 4" Axial Probe
SAD18-1902 2" Axial Probe

5270 gaussmeter probes
SAH17-1904 4" Axial Probe
SAH17-1902 2" Axial Probe

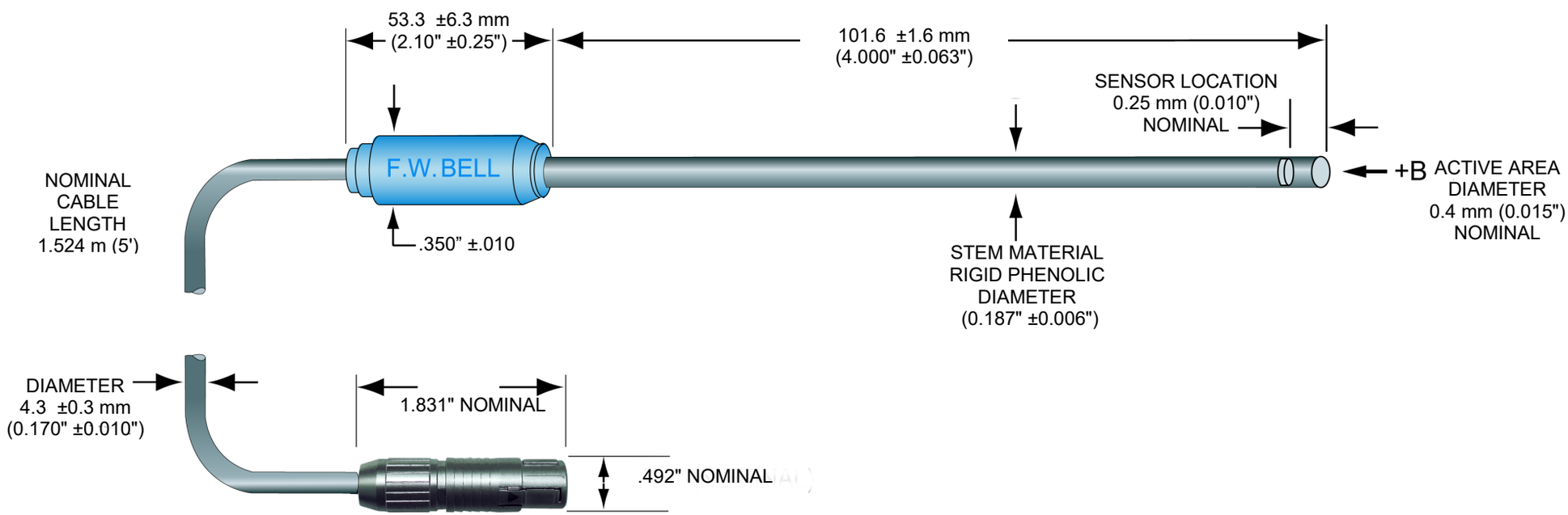

Figure 2-2
Standard Axial Probe

LOW FIELD AXIAL PROBE

Model Number: MOS51-3204

Flux Density Range: ±1G (100 µT) DC or peak AC

Corrected Linearity: ±0.75% of Reading
Frequency Bandwidth: 0 to 700 Hz (-3dB)

Offset change with Temperature: ±0.02mG / ºC (typical)

Accuracy change with Temperature: 0.001 % / ºC (typical)

Operating Temperature Range: 0 to +75ºC (+32 to +167°F)

Storage Temperature Range: -25 to +75ºC (-13 to +167°F)

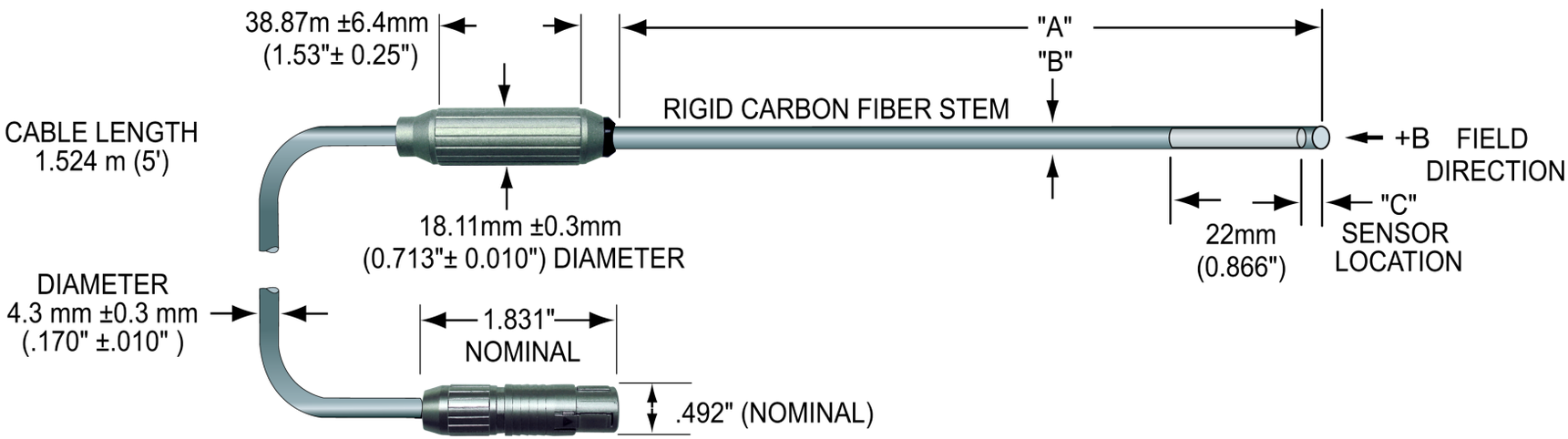

Figure 2-3
Low Field Axial Probe

ZERO FLUX CHAMBER

MODEL NUMBER: YA111

CAVITY DIMENSIONS:
Length: 50.8 mm (2”)
Diameter: 8.7 mm (0.343”)

ATTENUATION: 80 dB to 30 mT (300 G)

PURPOSE: To shield the probe from external magnetic fields during the ZERO or RELATIVE operations.

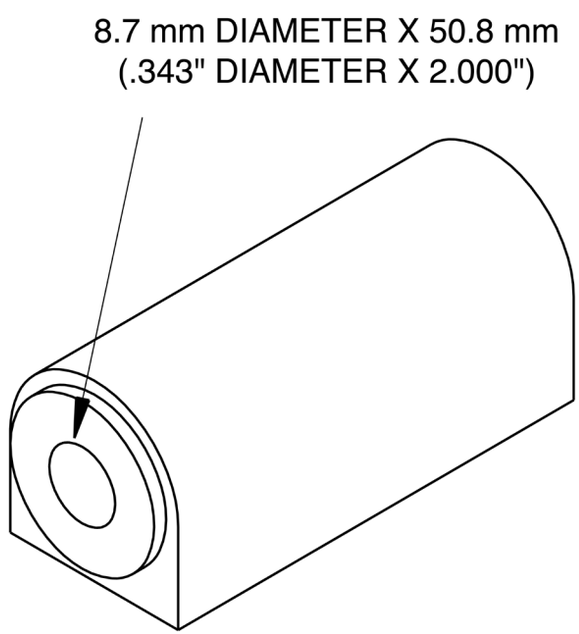

Figure 2-4
Zero Flux Chamber

Section 3
Operating Instructions

OPERATOR SAFETY 1

This symbol appears on the instrument and probe. It refers the operator to additional information contained in this instruction manual, also identified by the same symbol.

Be careful when operating the instrument near large magnetic fields, as it may affect the battery by shortening the lifespan or decreasing efficiency.

Do not allow the probe to come in contact with any voltage source greater than 30 Vrms or 60 Vdc

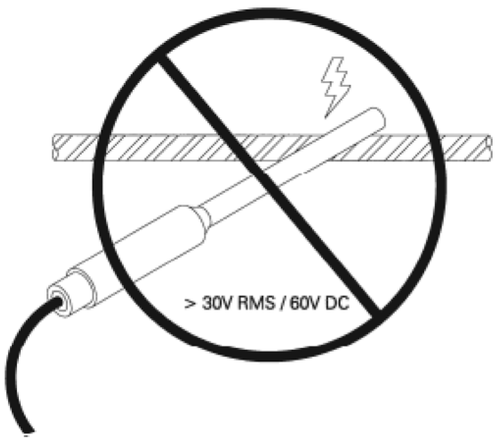

Figure 3-1
Probe Electrical Warning

OPERATOR SAFETY 2
Battery Safety

ATTENTION
Failure to follow the guidelines in this document may result in damaged equipment and/or personal injury.
Use the battery for its intended application only.

IMPORTANT
Do not:
- **Open, puncture or crush the battery**
- **Incinerate or expose the battery to temperatures greater than 85 °C**
- **Solder leads**
- **Short positive or negative terminals together**
- **Ship or dispose of battery except according to state and local regulations**

WARNING
Explosion Hazard - Batteries must only be changed in an area known to be non-hazardous.

Emergency first aid measures:
- In case or battery rupture or explosion, evacuate personnel from contaminated area and provide maximum ventilation to clear out fumes/gases
- In all cases, seek medical attention
- Eye Contacts: Flush with plenty of water (eyelids held open) for at 15 minutes
- Skin Contacts: Remove all contaminated clothing and flush affected areas with plenty of water and soap for at least 15 minutes
- Do not apply greases or ointments
- Ingestion: Dilute by giving plenty of water and get immediate medical attention
- Assure that the victim does not aspirate vomited material by se of potential drainage
- Assure that mucus does not obstruct the airway
- Do not give anything by mouth to an unconscious person
- Inhalation: Remove to fresh air and ventilate the contaminated area
- Give oxygen or artificial respiration if needed

Handling
- Use only approved chargers
- Never disassemble a battery or bypass any safety device
- Do not crush, pierce, short (+) and (-) battery terminals with conductive (i.e. metal) goods

Storing Lithium Batteries
- Do not store batteries above 60 °C or below -20°C
- Do not leave charging batteries unattended
- Store the battery in the original containers away from flammable materials
- Keep track of storage time
- Batteries should be stored at 10% - 50% capacity
- Do not store batteries longer than 10 years
- Do not store used batteries longer than 3 months before disposal

For more battery information, refer to the following standards:
- IEC 61960
- IEC 62133-2:2017
- IEC 62281:2019
- IEC 61959:2004
- UL-1642, 5th Edition
- UL-9540, 2nd Edition
- UL-9540A, 4th Edition
- UL-1973, 2nd Edition
- UL-1974, 1st Edition
- JIS C 8715-3

ATTENTION
Do not incinerate or dispose of lithium batteries in general trash collection. They may explode or rupture violently. Check state and local regulations dealing with the disposal of these materials. You are legally responsible for hazards created while your battery is being disposed.

INSTRUMENT PREPARATION

1) Remove screen protector from the touch screen.

2) Plug in the USB cable into the meter.

3) Plug the other end of the USB cable into the power adapter and apply power to charge the battery fully (approximately 2 hours).

4) Install the probe by matching the keyway in the connector to that in the mating socket in the meter. The connector will lock in place when fully installed. To disconnect, pull on the body of the connector, *not the cable*!

NOTE: In order to operate the meter with only the battery, USB power must be momentarily applied. After the battery power is activated, this will not have to be repeated unless the battery is disconnected.

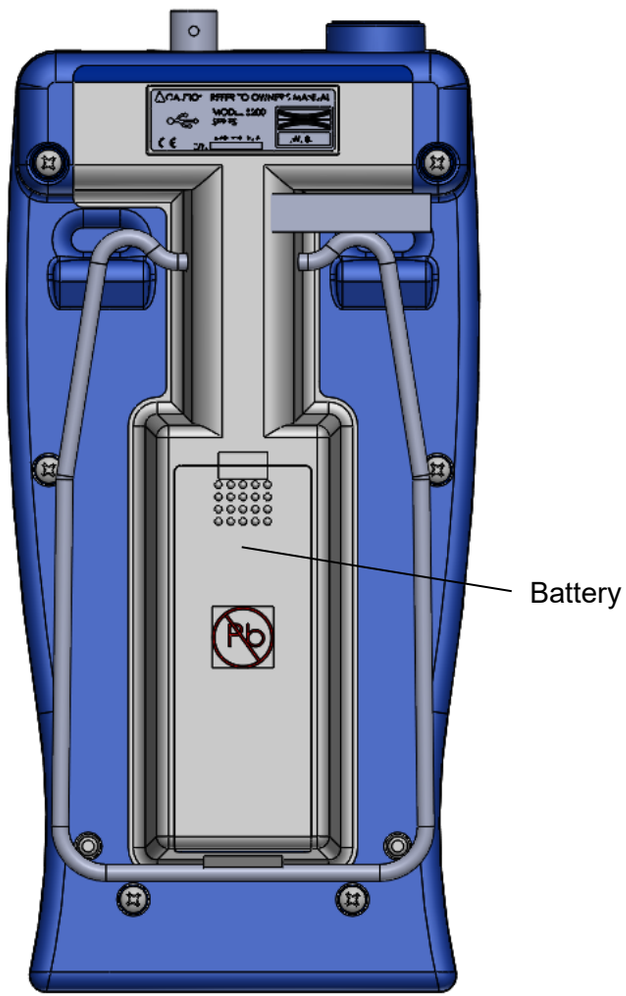

Figure 3-2
Battery Location

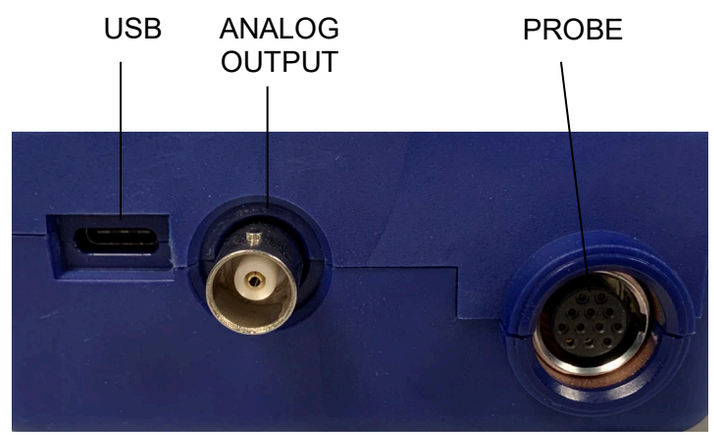

Figure 3-3
Connections

OPERATING FEATURES

Keypad

On/Off button

Enter button

Navigation arrow buttons, left

Navigation arrow buttons, right

Navigation arrow buttons, up

Navigation arrow buttons, down

The On/Off button and the Enter button can be used with a ‘short’ press or a ‘long’ press. To implement a ‘short’ press, hold the button down for less than one second before releasing. To implement a ‘long’ press, hold the button down for greater than one second.

On/Off button when meter is powered on:
‘short’ press will give the option to power down
‘long’ press will power down the meter

Enter button when meter is on the home screen:
‘short’ press will perform the action shown on the selected button
‘long’ press will perform the action shown above the button

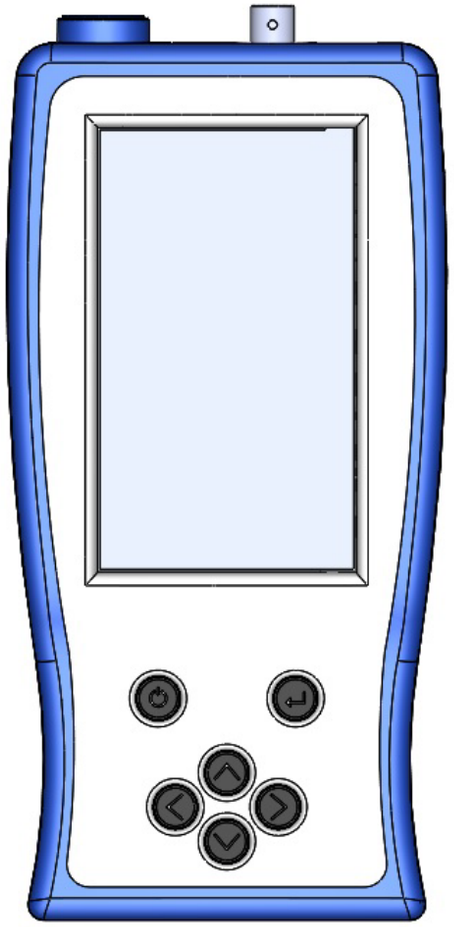

Figure 3-4
Keypad

POWER-UP

Power ON To turn the unit ON, press

Power OFF To turn the unit OFF, for three seconds press

Alternatively, short press

then select

To cancel the power off operation, select

When battery power is used for the first time, momentarily apply USB power to the meter to activate the battery. This will need to be done any time the battery is disconnected and re-installed.

Press the POWER switch. There will be a momentary audible beep (If audio is enabled).

The instrument will conduct a self test before measurements begin. If a problem is detected the phrase “Err” will appear on the display followed by a 3 digit code. The circuitry that failed will be retested and the error code will appear after each failure. This process will continue indefinitely or until the circuitry passes the test. A condition in which a circuit fails and then passes should not be ignored because it indicates an intermittent problem that should be corrected.

If the self test is successful, the meter will perform a self calibration. During this phase, the meter will display a calibration sequence "CALX" message. Calibration will not occur if there is no probe connected. Until the probe is connected the phrase “No probe connected” will appear in the box where readings are normally displayed.

Per the *SPECIFICATIONS* section, allow 15 minutes warmup time for rated accuracy.

The most common errors displayed are a result of damage to the sensing element located in the tip of the probe. A damaged sensing element can result in the following error codes: E064 and E067.

Figure 3-5
Missing Probe Indication

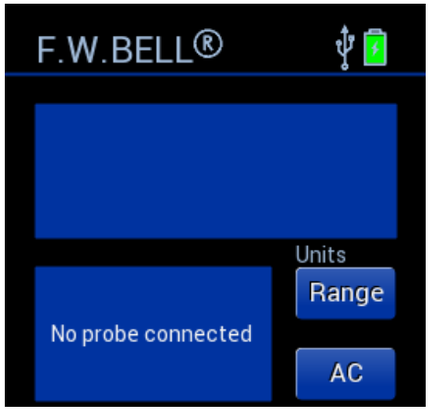

Figure 3-6
Power-Up Display

POWER-UP SETTINGS

The meter permanently saves certain aspects of the instrument's setup and restores them the next time the meter is turned on. The conditions that are saved are:

RANGE setting (including AUTO range)
MODE (AC or DC)
UNITS of measure (gauss, tesla or ampere/meter)
ANALOG OUTPUT function
Meter settings (brightness, dark mode, audio, time & date, idle power-off timer)

Other aspects are not saved and default to these conditions:

RELATIVE mode (turned OFF)
RELATIVE value (set to 0)
ZERO mode (inactive)
HOLD mode (turned OFF)
ALERT SET mode (turned OFF)

LOW BATTERY CONDITION

The meter is designed to use one 3.6V lithium ion battery. When the battery voltage becomes too low, the battery symbol on the display will show as just about empty and the screen will force the brightness to dim.
Replace the batteries or use an external AC to DC power supply.

Instrument specifications are not guaranteed when a low battery condition exists!

Home Screen

1. Measurement
2. Information Box
   - Status on current settings
   - Messages
3. Settings pages
4. Relative (cancel known fields)
   - Auto/Manual displayed
   - ‘short press’ start relative operation
   - ‘long press’ to relative setting page
5. Zero (cancel ambient fields)
   - Auto/Manual displayed
   - ‘short press’ start zero operation
   - ‘long press’ to zero setting page
6. Probe/USB/Battery Status
7. Units/Range shown
8. Range ‘short press’
   - Low = 300 G
   - Med = 3 kG
   - High = 30 kG
   - Auto

   Units ‘long press’
   - Gauss, tesla, amp/meter
9. AC or DC
10. Data Internal Storage
    - ‘short press’ record to log
    - ‘long press’ to view log
11. Alert Set
    - ‘short press’ to enable
    - ‘long press’ to view settings
12. Hold
    - ‘short press’ to reset
    - ‘long press’ to hold
      - Min, Max, Peak, or Off

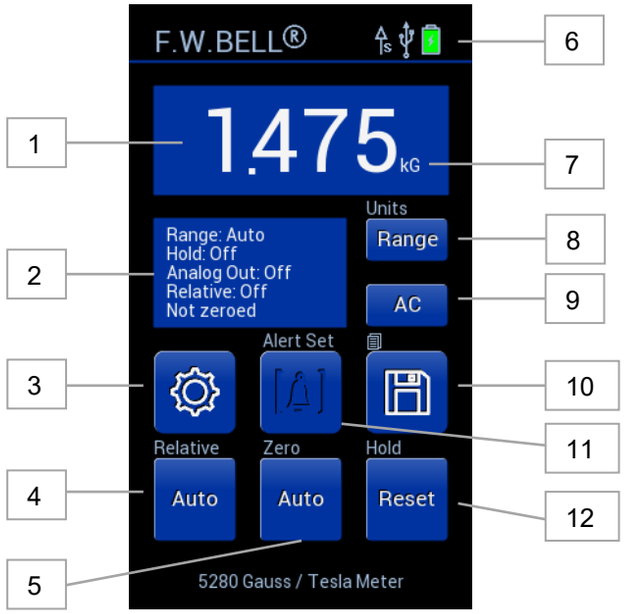

Figure 3-7
5280 Home Screen

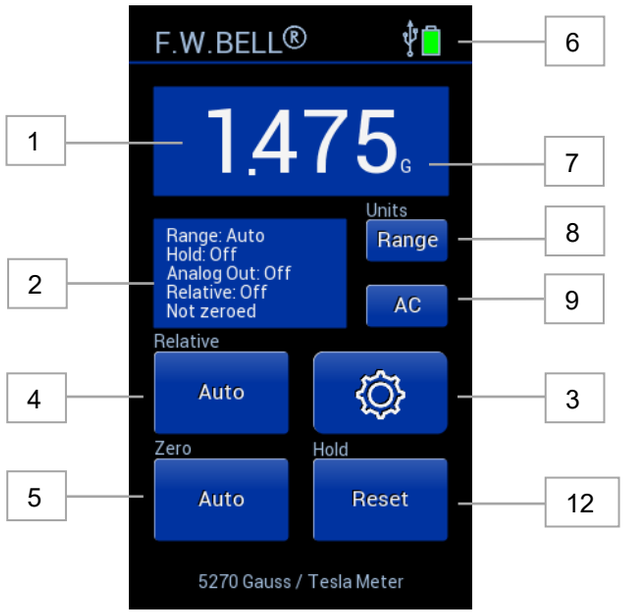

Figure 3-8
5270 Home Screen

Meter Settings

Setting Pages

To access the settings pages, press

To move between pages, press or

To go back to the home screen, press

Setting page number can be seen in the upper left corner
The highlighted larger dot indicates the page number

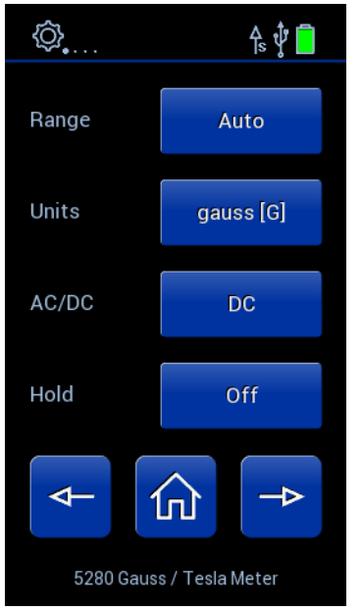

Figure 3-9
5200 Settings 1

5280 Only

Figure 3-10
5200 Settings 2

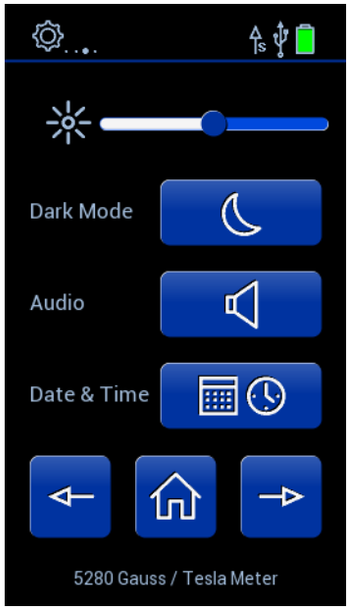

Figure 3-11
5200 Settings 3

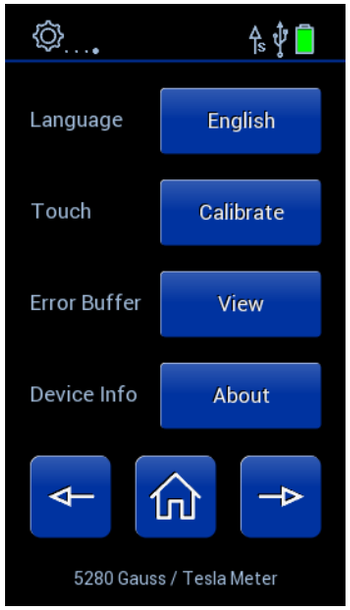

Figure 3-12
5200 Settings 4

Brightness

On settings page 3, the brightness screen indicator is

The brightness can be adjusted using the brightness indicator. Press the anywhere on the bar to adjust the screen to that brightness. Alternatively, the keypad can be used to navigate to the brightness indicator and use the left/right arrows to adjust. The battery will last longer with a lower brightness setting. When the battery is low, the meter will enter a power save mode by dimming the screen and preventing the brightness indicator from adjusting.

Dark Mode

On settings page 3, select dark mode by pressing to show the moon symbol

On settings page 3, select light mode by pressing to show the sun symbol

The meter can be display in dark or light mode. Dark mode has a black background with white characters. Light mode has a white background and black characters. The mode does not change the battery life.

Audio

On settings page 3, toggle between sound and silent mode by pressing

The meter has audible beeps for different functions. For example, the meter will beep when the zero operation starts and finishes. The sound can be turned off by toggling the AUDIO button. A cross through the speaker symbol will indicate that the meter is in silent mode. The Alert Set function can override silent mode when the measurement is in the selected range. See the Alert Set section for more details.

Date and Time

On settings page 3, enter the Date & Time settings page by pressing

To set the Date & Time, use the arrow and +/- buttons

To save the current selection, press

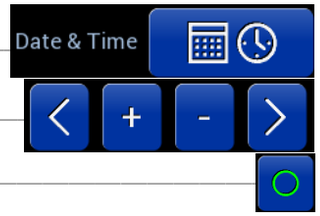

The arrows control the position of the underline. The value that is underlined can be adjusted by using the plus and the minus buttons. The D/M/Y button can be used to cycle through the date formats: D/M/Y, M/D/Y. The 12 h button can change between 12 h and 24 h time formats.

Idle Power-off Timer:

In Date & Time setting page, cycle through the time delay options by pressing

To enable or disable the time delay, press

To save the current selection, press

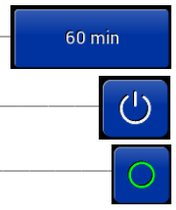

When the Idle Power-off time is enabled, then the meter will turn off after inactivity for the duration that is displayed on the button. When disabled, no amount of inactivity will turn off the meter.

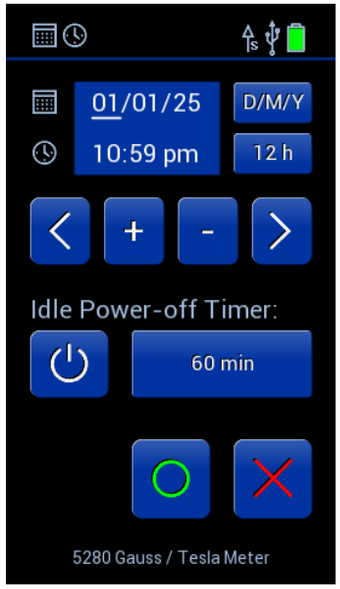

Figure 3-13
Time & Date Settings Page

Languages

In settings page 4, toggle between languages by pressing

Pushing the language button will display a message that indicates the only language currently supported is English.

Touch Screen Calibration

In settings page 4, start the screen calibration by pressing

Press as precise as possible to the dots on the screen as directed

If the screen calibration went as planned, press to confirm

If the screen calibration did not go as planned, press to reject and revert back to the previous setting

The touch screen calibration operation allows the individual users unique touch location to be associated with the desired location. Be sure to touch as close to the dots as possible or else the touch screen may not work correctly. The confirm page allows the user to reject the operation in case the operation did not go as planned.

If a less than desirable screen calibration is applied or the touch screen buttons are not functioning correctly, then navigate to the touch calibration operation by using the physical bush buttons, not the touch screen. Redo the touch screen calibration by pushing as close to the dots as possible and confirm.

Error Buffer

In settings page 4, view the error buffer by pressing

The Error Buffer will display error codes if an error does occur. The meter will list the 12 most recent errors since powering on. The error codes will not automatically be erased if the error is no longer present. The meter has to be power cycled to check if the error still applies. The error codes and meanings are listed in a table in section 4, below.

The calibration button will lead to a password protected calibration page. This is for internal FW Bell use only.

Device Info

In settings page 4, view the device info by pressing

The model number, current SW version, current DSP version, and the calibration due date are all listed on the about page.

Figure 3-14
Example About
Page

AC OR DC MEASUREMENT SELECTION

To toggle between AC and DC Mode, press on the home screen — AC or DC

Alternatively, press

To navigate to setting page 1, press — or

To toggle AC/DC modes, press — AC/DC DC

To return to normal operation, press

The meter is capable of measuring either static (DC) or alternating (AC) magnetic fields. The meter will display “AC” on the home screen AC/DC button when in AC mode. The meter will display “DC” on the home screen AC/DC button when in DC mode. The DC and AC mode is discussed in more detail later in this section. This setting is saved and will be restored the next time the meter is turned on.

UNITS OF MEASUREMENT SELECTION

To toggle between units, press and hold on the home screen — Units Range

Alternatively, press

To navigate to setting page 1, press — or

To toggle Units modes, press — Units gauss [G]

To return to normal operation, press

The meter is capable of providing flux density measurements in terms of gauss (G), tesla (T) or ampere/meters (A/m). This setting is saved and will be restored the next time the meter is turned on.

RANGE SELECTION

To select Auto Range or a fixed Range, press on the home screen — Range

Press Range until the desired range is selected and shown in the info box — Range: Auto

Alternatively, press —

To navigate to setting page 1, press — or

To toggle Range modes, press — Range Auto

To return to normal operation, press —

The meter is capable of providing flux density measurements on one of three fixed ranges, or it can be programmed to automatically select the best range for the present flux density. The available ranges are listed in the *SPECIFICATIONS* section of this manual. The ranges advance in decade steps. The lowest range offers the best resolution while the highest range allows higher flux levels to be measured.

In the autorange mode, the range is advanced if the reading reaches 95% of the present range. The range is lowered when the reading falls below 9% of full scale for the present range. The speed at which the readings are updated decreases slightly when AUTO ranging is used.

This setting is saved and will be restored the next time the meter is turned on.

NOTE: The AUTO range selection will be canceled if the RELATIVE mode is turned on.

OVERRANGE CONDITION

If the magnitude of the magnetic flux density exceeds the limit of the selected range the meter will display a flashing value of “2999” (gauss or tesla mode) or “2387” (ampere meter mode). The next highest range should be selected. If already on the highest range, then the flux density is too great to be measured with this instrument.

HOLD MODE SELECTION

To select Min, Max, Peak, Off, press and hold on the home screen

Press Range until the desired range is selected and shown in the info box

Alternatively, press

To navigate to setting page 1, press

or

To toggle Range modes, press

To return to normal operation, press

To reset the currently held value, press on the home screen

In some applications it may be desirable to hold a reading that is either greater than or less than all previous readings, or which has the greatest peak value whether positive or negative.

The MAX HOLD function holds the reading that is arithmetically greater than all previous readings. For instance, a reading of +125.0 is greater than +99.0 or -150.0.

The MIN HOLD function holds the reading that is arithmetically less than all previous readings. For instance, a reading of -125.0 is less than 99.0 or +150.0.

The PEAK HOLD function captures and holds the peak value of the flux density waveform within the response time capabilities of the meter. See the *SPECIFICATIONS* section of this manual for more information. The peak can be either positive or negative, whichever has the greatest magnitude. For instance, a peak value of -100.0 is greater than a peak value of +90.0.

Do not use the AUTO RANGE when using HOLD. Use one of the available ranges are listed in the *SPECIFICATIONS* section of this manual.

Difference between PEAK and MAX for AC: Max is the maximum RMS value. PEAK gives the value of the point on the waveform with the greatest amplitude.

MIN / MAX HOLD USAGE

See the *SPECIFICATIONS* section for response time information.

The MAX HOLD function holds the reading that is arithmetically greater than all previous readings. The MIN HOLD function holds the reading that is arithmetically less than all previous readings. These modes are useful in determining the maximum or minimum value of magnetic events that occur over a period of time.

If the reading exceeds the range limit, the 5280 meter will hold a flashing value of “2999” (gauss or tesla mode), “2387” (ampere meter mode) or the maximum value allowed in the RELATIVE mode. The 5270 meter will hold a flashing value of "1999" (gauss or tesla mode), "1592" (ampere meter mode) or the maximum value allowed in the RELATIVE mode.

The held value can be reset by pressing the RESET button. The next value displayed after a reset will be the present value of flux density. For instance, if the held reading is 200.0 G and the present flux density is 100.0 G, the meter will display 100.0 G after the reset.

If the analog output is being used, the output signal will continue to represent the real time flux density as seen by the probe. It is not affected by the HOLD function.

PEAK HOLD USAGE

See the *SPECIFICATIONS* section for response time and accuracy information.

In the PEAK HOLD mode, the input signal is sampled many times each second. Each sample is compared to all previous samples and that which has the greatest amplitude (regardless of polarity) is held on the display. This mode can be used to capture the peak value of a fast, onetime magnetic event such as a magnetizing pulse.

These are the differences between the PEAK HOLD mode and the MIN / MAX HOLD modes:

The PEAK HOLD mode considers the magnitude of the reading regardless of the polarity.

The response time of the PEAK HOLD mode is much faster but final accuracy is less.

If the analog output is being used, the output signal will continue to represent the real time flux density as seen by the probe. It is not affected by the HOLD function.

ZERO FUNCTION

“Zeroing” the probe and meter is one of the most important steps to obtaining accurate dc flux density measurements. The ideal Hall generator produces zero output in the absence of a magnetic field, but actual devices are subject to variations in materials, construction and temperature. Therefore, most Hall generators produce some output even in a zero field. This will be interpreted by the meter as a flux density signal.

Also, the circuits within the meter can produce a signal even when there is no signal present at the input. This will be interpreted as a flux density signal. Lastly, magnetic sources close to the actual field being measured, such as those from electric motors, permanent magnets and the earth (roughly 0.5 gauss or 50 mT), can induce errors in the final reading.

It is vital to remove these sources of error prior to making actual measurements. The process of “zeroing” removes all of these errors in one operation. The meter cancels the combined DC error signal by introducing another signal of equal magnitude with opposite polarity. After zeroing, the only dc signal that remains is that produced by the probe when exposed to magnetic flux.

NOTE: Zeroing the meter and probe affects only the static (DC) component of the flux density signal.

NOTE: The process of zeroing also affects the analog signal.

There may be situations when the user prefers to shield the probe from all external magnetic fields prior to zeroing. Provided with the meter is a ZERO FLUX CHAMBER which is capable of shielding against fields as high as 30 mT (300 G or 23.88 kA/m). The probe is simply inserted into the chamber before the zeroing process begins.

Handle the Hall probe with care. Do not bend the stem or apply pressure to the probe tip as damage may result. Use the protective cover when the probe is not in use.

In other situations, the user may want the probe to be exposed to a specific magnetic field during the zeroing process so that all future readings do not include that reading (such as the earth’s field). This is possible with the following restrictions:

1) The external field must not exceed 30 mT (300 G or 23.88 kA/m).

2) The field must be stable during the zeroing process. It should not contain alternating (AC) components.

AUTOMATIC ZERO FUNCTION

To start the AUTO ZERO operation when and AUTO is already selected, press on the home screen

To select AUTO ZERO from the ZERO settings page, press and hold on the home screen

Alternatively, press

To navigate to setting page 2, press or

To enter the ZERO settings page, press

To select AUTO ZERO in settings page, press until button displays AUTO

To return to normal operation, press

Then, press

To keep previous settings, press

When in AUTO ZERO mode, the meter can be re-zeroed by pressing

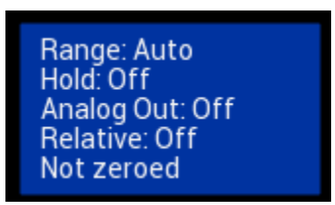

Figure 3-15
Home Screen Info Box –
Not zeroed

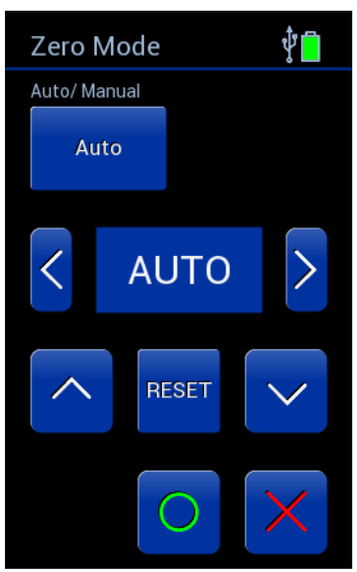

Figure 3-16
Zero Auto Settings Page

AUTOMATIC ZERO FUNCTION

The meter provides two methods to zero the probe. The first is completely automatic. Prepare the probe for zeroing, then start the automatic zeroing. The screen will say “Processing” while the meter zeros, and afterwards the meter will display approximately zero as the current reading. If the reading before zeroing the probe exceeds ±30 mT (300 G or 23.88 kA/m) when the probe is in a zero chamber or very low field, then the probe may be defective. The meter will switch over to the DC mode of operation during zeroing. Recall that the zeroing operation affects DC offsets only. If you wish to suppress an AC field reading, consider using the RELATIVE mode.

Once automatic zeroing begins it must be allowed to complete. During this time all controls are disabled except for the POWER switch. The process normally takes from 5 to 15 seconds. If the sound is enabled, the meter will have an audible beep when automatic zeroing begins.

The meter selects the lowest range and adjusts the nulling signal until the net result reaches zero. At this point the automatic process is terminated and the “Processing” text will disappear.

If the nulling process is successful, the next highest range is selected. No further electronic adjustments are made, but at this stage a reading is acquired which will be mathematically subtracted from all future readings on this range. This process is then repeated for the highest range. When finished, the meter will sound an audible beep (if audio is enabled) and the “Processing” text will disappear. At this point the automatic process can be repeated or a manual adjustment can be performed (see “Manual Zeroing”).

The final zero values will remain in effect until the meter and probe are zeroed again.

NOTE: Zeroing the probe cancels the RELATIVE mode if it was turned on.

MANUAL ZERO FUNCTION

To select MANUAL ZERO from the ZERO settings page, press and hold on the home screen

Alternatively, press

To navigate to setting page 2, press or

To enter the ZERO settings page, press

To select MANUAL ZERO in settings page, press until button displays MANUAL

To select manual value as the ZERO point, navigate digits with arrows

And use these arrows to change the values or use RESET to clear the offset

To return to normal operation, press

Then, press

To keep previous settings, press

When in MANUAL ZERO mode, the meter can be re-zeroed by pressing

Figure 3-17
Zero Manual Settings Page

MANUAL ZERO FUNCTION

The second zeroing method is a manual adjustment. This feature also allows the user to set the “zero” point to something other than zero, if desired. Position the probe for zeroing, then start a manual ZERO operation. The screen will display the actual DC flux density readings. The meter will select the lowest range regardless of which range was in use prior to selecting the ZERO function. If the reading before zeroing the probe exceeds ±30 mT (300 G or 23.88 kA/m) when the probe is in a zero chamber or very low field, then the probe may be defective. The meter will switch over to the DC mode of operation during zeroing. Recall that the zeroing operation affects DC offsets only. If you wish to suppress an AC field reading, consider using the RELATIVE mode.

NOTE: Making a manual ZERO adjustment not only affects the lowest range, but also the higher ranges to a lesser extent. For example, assume an automatic ZERO has already been performed, after which all three ranges should read zero. Now a manual adjustment is made that causes the reading on the lowest range to be nonzero. The reading on the other ranges may also be nonzero depending upon the magnitude of the change. The adjustment has 10 times less effect on the middle range and 100 times less effect on the highest range.

NOTE: Zeroing the probe cancels the RELATIVE mode if it was turned on.

RELATIVE MODE

The RELATIVE mode allows a specific flux density value to be subtracted from all incoming readings. When the RELATIVE mode is active, all incoming readings are "relative" to an offset selected by the user. For example, if the displayed value is +100 gauss when RELATIVE mode is activated, and the flux density at the probe changes to +150 gauss the displayed value will be +50.0 gauss. If the flux density then drops to +50 gauss, the value displayed by the meter will be -50 gauss. The RELATIVE mode allows for the direct readout of variations around a given field level, whether static (DC) or alternating (AC).

There are two ways to generate a relative value. When AUTO RELATIVE is selected, the meter uses the present flux density reading as the relative value. When MANUAL RELATIVE is selected, the user can specify a desired relative value using the Up, Down, Left, and Right Arrow buttons. Each mode will be discussed in more detail.

There are two restrictions when using the RELATIVE mode.

1) The RELATIVE mode can only be used in a fixed range. If the AUTO RANGE feature is in use and the RELATIVE mode is turned on, the AUTO RANGE feature is disabled. Conversely, if the RELATIVE mode is turned on and the AUTO RANGE feature is activated, the RELATIVE mode is disabled.

2) If the meter is in the RELATIVE mode and a ZERO function is selected, (either MANUAL ZERO or AUTO ZERO), the RELATIVE mode is disabled.

There may be situations when the user may prefer to shield the probe from all external magnetic fields prior to performing a RELATIVE operation. Provided with the meter is a ZERO FLUX CHAMBER which is capable of shielding against fields as high as 30 mT (300 G or 23.88 kA/m). The probe is simply inserted into the chamber before the RELATIVE operation begins.

NOTE: The RELATIVE mode is disabled when the probe and meter are zeroed or if the meter's power is cycled.

NOTE: If the analog output is being used, the output signal will continue to represent the flux density as seen by the probe. The analog output is not affected by the RELATIVE operation.

Handle the Hall probe with care. Do not bend the stem or apply pressure to the probe tip as damage may result. Use the protective cover when the probe is not in use.

AUTOMATIC RELATIVE MODE

To start the AUTO RELATIVE when and AUTO is already selected, press on the home screen

To select AUTO RELATIVE from the RELATIVE settings page, press and hold on the home screen

Alternatively, press

To navigate to setting page 2, press or

To enter the RELATIVE settings page, press

To select AUTO RELAVTIVE in settings page, press until button displays AUTO

To return to normal operation, press

Then, press

To keep previous settings, press

To deactivate the AUTO RELATIVE, press to deselect ON/OFF in the RELATIVE settings page

When in AUTO RELATIVE mode, the meter can be readjusted by pressing

In the automatic relative mode, the present flux density as seen by the probe is used as the relative offset value.
Prepare the probe and select an appropriate range and mode (AC or DC) as needed (AUTO RANGE is deactivated when RELATIVE MODE is used).

To automatically assign the current reading as the relative offset value, select the AUTO RELATIVE operation. When complete, the unit will return to the measurement mode and the info box will display “Relative: Auto” indicating that a relative value is being subtracted from all subsequent readings.

Figure 3-18
Home Screen Info Box – Relative

Difference between ZERO and RELATIVE: ZERO introduces an electrical offset signal into the circuitry.
RELATIVE is strictly a mathematical process.

MANUAL RELATIVE FUNCTION

To select MANUAL RELATIVE from the RELATIVE settings page, press and hold on the home screen

Alternatively, press

To navigate to setting page 2, press or

To enter the RELATIVE settings page, press

To select MANUAL RELATIVE in settings page, press until button displays MANUAL

To select manual value as the ZERO point, navigate digits with arrows

And use these arrows to change the values or use RESET to clear the offset

To return to normal operation, press

Then, press

To keep previous settings, press

To deactivate the MANUAL RELATIVE, press to deselect ON/OFF in the RELATIVE settings page

When in MANUAL RELATIVE mode, the meter can be readjusted by pressing

The second method by which to set a relative value is a manual adjustment. In some cases, the user will wish to set an absolute relative value. To do this, insert the probe in the "zero flux chamber" provided with this meter.

To manually assign a relative offset value, select the MANUAL RELATIVE operation. The current settings box will display Relative: Manual indicating that a relative offset is being subtracted from all incoming readings.

In other cases, the probe may be positioned in a stable DC or AC magnetic field that does not exceed the present range limit. In most cases, the reading will be adjusted to zero so that the value of the reference is subtracted from all incoming readings.

Handle the Hall probe with care. Do not bend the stem or apply pressure to the probe tip as damage may result.

Measurement Log

To save a measurement, press on the home screen

Short press to save the current measurement

Long press to view the saved measurements

The meter can save the current measurement along with the date and time by pressing the save button. The measurement log can be viewed by pressing and holding the save button. Up to 16 measurements can be saved. After the maximum number of measurements are saved, then the oldest data point will be automatically erased with each new save operation.

The log displays the measurements in chronological order with the most recent measurement displaying first. Two measurements are displayed at a time. The arrows can be used to scroll through the list. One UP arrow press moves the measurements up one place and one DOWN arrow press moves the measurements down one place.

Figure 3-19
Measurement Log

ALERT RANGING MODE

To select ALERT SET from the ALERT SET settings page, press and hold on the home screen

Alternatively, press

To navigate to setting page 2, press or

To enter the ALERT SET settings page, press

To select Range mode in settings page, press until button displays RANGE

To select lower and upper limits, press each limit box

To select Threshold mode in settings page, press until button displays THRESHOLD

To select the < or > symbol and a value, press the <,> and Threshold boxes

To select Tolerance mode in settings page, press until button displays TOLERANCE

To select the center and the +/- value, press those boxes

To cycle through Audio alert in range/out of range/none, press

To enable ALERT SET, press On/Off after the mode and values are set

To keep previous settings, press

To keep the settings, press

When in normal operation, the ALERT SET can be applied by pressing

ALERT RANGING MODE

In the Alert Ranging mode, an audible beep can be set based on a user defined range. The audible beep can be enabled when in range, enabled when out of range, or disabled. When the measurement meets the audio range criteria, the meter will send out a continuous beep until the measurement transitions outside of the audio criteria range or until the Alert Set feature is set to off.

The info box will show “Alert Range: In” if the measurement is inside of the range and “Alert Range: Out” when outside the range. It is independent of the audible beep setting.

Alert Set Options:

- On/Off
- Modes (Info box “Alert Range: In”, if the measurement is inside of the following ranges):
    - Range = select the upper end of the range and the lower end of the range
    - Threshold = select < (less than) or > (greater than) and the value to be the transition point
    - Tolerance = select center point and plus/minus value
- Audio alert if:
    - In range
    - Out of range
    - None

The mode and the range values must be set before the Alert Set can be enabled.
Once alert ranging is enabled, the following settings/operations cannot be changed: range, units, ac/dc, hold, relative, and zero. Select the desired settings when the alert range is disabled.
The last Alert Ranging settings will be recalled as long as those settings/operations are not changed.

ANALOG OUTPUT FUNCTION

To enable and disable ANALOG OUTPUT operation, press

To navigate to setting page 2, press or

To ANALOG OUTPUT to ON, press to show the power icon filled with white

To ANALOG OUTPUT to OFF, press to show the power icon empty

To return to normal operation, press

The meter is capable of providing an analog voltage signal proportional to the present flux density level. Calibration is set to 3.0 V full scale DC or 3.0 VRMS AC, depending upon the mode of operation. This signal, available at the BNC connector, can be connected to a voltmeter, oscilloscope, recorder, data logger, or external analog to digital converter.

Power consumption increases when using the analog output. If use of the analog output port is unnecessary, maximize battery life by disabling the analog output feature.

ANALOG OUTPUT USAGE

See the SPECIFICATIONS section for frequency range and accuracy of the analog output.

The analog output signal is calibrated to 3 VDC or 3 VRMS depending on the selected mode. The analog output voltage is proportional to the flux density being measured depending on the meter's current range. For instance, when in the 30 mT DC range a reading of 12.3 mT relates to an analog output voltage of 1.23 VDC. When in the 3 T range, a reading of 1.23 T produces the same output, 1.23 VDC.

The analog output can reach a maximum output of about 4.25 VDC in order to accommodate the peak value of a 3 VRMS AC signal. This means that the analog output can be used to measure flux density levels that exceed the normal range of the displayed readings. For instance, a level of 31.5 mT in the 30 mT range would normally result in a flashing 29.99 mT overrange condition. However, the output will still be +3.15 VDC.

The meter will apply an optimum amount of low pass filtering to the analog output signal based on the frequency of the detected magnetic field and mode of operation (AC or DC mode).

When both the ANALOG OUTPUT and AUTO RANGE features are active, the following condition can occur:

Suppose the present range is 3 kG and the present reading is +2.8 kG. The analog output will be +2.8 VDC. The signal then increases to +3.2 kG, which would force an automatic change to the 30 kG range setting. The analog output will now be +0.32 VDC because of the range change. This can lead to problems if the analog signal is being used to make decisions since there is no indication that a range change has occurred. In these situations, it is best to select a fixed range that covers the expected flux density span.

The analog output signal contains both the DC and AC components of the flux density signal. This means that it will also contain any initial DC offsets in the probe and the meter's circuitry. These offsets can be removed by the ZERO function.

The ZERO function can also be used to introduce a DC offset if desired. This is useful when observing AC waveforms in which one portion of the waveform is being clipped because it exceeds the 4.25 VDC limit of the meter. Using the ZERO function, the center of the waveform can be moved to reduce or eliminate the "clipping" as depicted in the figure below.

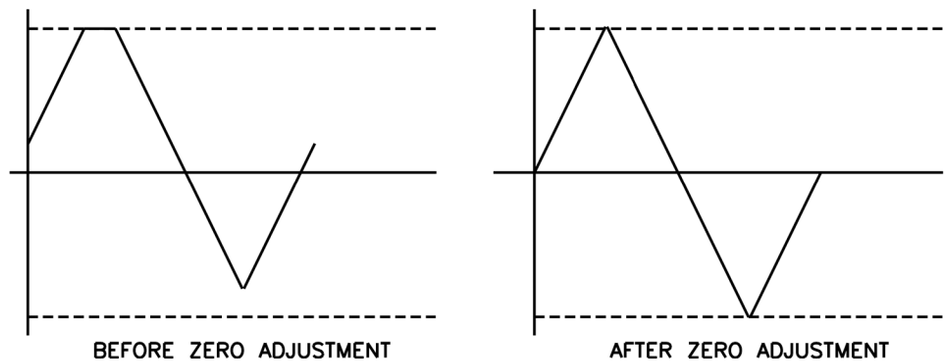

Figure 3-20
Adjusting the DC Offset of the Analog Output

SOURCES OF MEASUREMENT ERRORS

When making flux density measurements, there are several conditions that can introduce error:

1) Operating the meter while the battery symbol shows low (battery symbol has a small amount of red at the bottom).

Instrument specifications are not guaranteed when a low battery condition exists!

2) Failure to zero the error signals from the meter, probe, and nearby sources of magnetic interference.

3) Subjecting the probe to physical abuse.

4) One of the most common sources of error is the angular position of the probe with respect to the field being measured. As mentioned in Section1, a Hall generator is not only sensitive to the number of flux lines passing through it but also to the angle which the pass through it. The Hall generator produces the greatest signal when the flux lines are perpendicular to the sensor as shown in Figure 3-21.
The probe is calibrated and specified with flux lines passing perpendicularly through the Hall generator.

5) As shown in Figure 3-22, the greater the distance between the magnetic source and the Hall probe, the fewer flux lines will pass through the probe. This would cause the probe's output to decrease.

Handle the Hall probe with care. Do not bend the stem or apply pressure to the probe tip as damage may result. Use the protective cover when the probe is not in use.

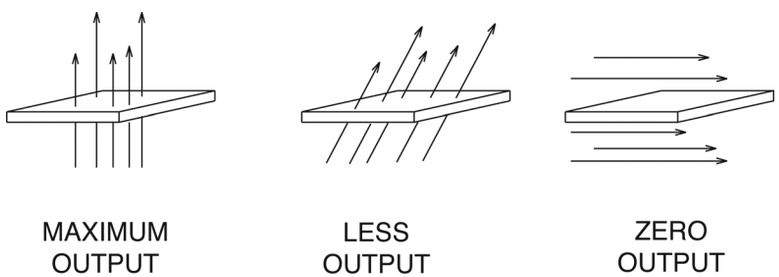

Figure 3-21
Probe Output versus Flux Angle

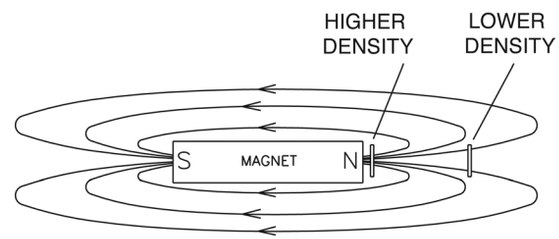

Figure 3-22
Probe Output versus Distance

6) Flux density can vary considerably across the pole face of a permanent magnet. This can be caused by internal physical flaws such as hairline cracks or bubbles, or an inconsistent mix of materials. Generally, the sensitive area of a Hall generator is much smaller than the surface area of the magnet, so the flux density variations are very apparent. Figure 3-23 illustrates this situation.

7) The accuracies of the meter and probe are affected by temperature variations. Refer to the SPECIFICATIONS section for the specific information.

MORE DETAILS ON AC MODE OPERATION

It is possible for the flux density signal to contain both a DC component and an AC component. In the AC mode, the value displayed is the true RMS value of the waveform with its DC component removed. However, if the DC component is too high it may force the peak value of the waveform to exceed the electrical limits of the meter. This could cause the waveform to clip and introduce errors in the final reading. This can also lead to an overrange condition on the display and can lead to erratic behavior if the AUTO RANGE feature is active. The presence of a clipped AC signal can be verified by observing the analog output signal.
As stated in the SPECIFICATION section, the accuracy of the true RMS reading is only guaranteed for readings greater than about 4% of the full scale range. For example, this would be 1 mT in the 300 mT range. Select a lower range if possible to maintain accuracy. Refer to page 3-29 and Figure 3-20 for more detailed information about reducing this type of error. Clipped signals can also occur when observing higher frequency signals (typically >10 kHz) in the upper 30% of the selected range, (especially with a transverse probe). In this case, the next higher range should be used.

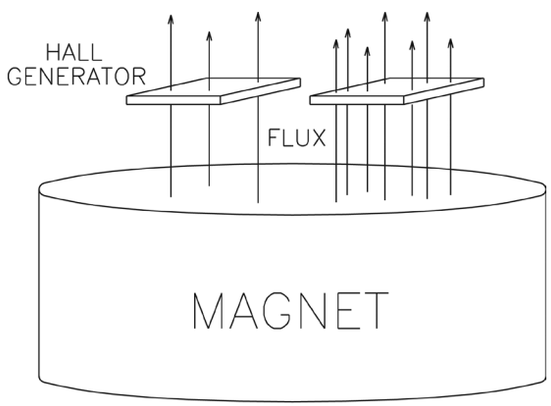

Figure 3-23
Flux Density Variations in a Magnet

The use of some lower quality or unshielded cables can result in measurement errors and increase susceptibility to radio frequency interference (RFI).

An AC reading, being a true RMS value, has no polarity. However, when using the RELATIVE function in AC mode, a negative value may be displayed. A negative AC reading means that the present reading is less than the RELATIVE value. An unsigned value means the present reading is greater than or equal to the RELATIVE value. For example, if the original RELATIVE value was 100 mT and the present field is 80mT, the result will be -20 mT.

MORE DETAILS ON DC MODE OPERATION

It is possible for the flux density signal to contain both a DC component and an AC component. In the DC mode, this can lead to unstable readings. If the peak value of the AC component reaches the electrical limits of the meter, even though the average DC level is within the limits, an overrange condition may appear on the display. This situation can also lead to erratic behavior if the AUTO RANGE feature is active.

The presence of an AC signal can be verified by observing the analog output signal or by using the AC mode to determine the magnitude of the AC component.

Battery Removal

Only remove the battery if it is safe to do so. Be sure the battery is not too warm to touch and there are no obvious signs of damage.

Step 1:
Remove the back battery cover by pressing the raised bumps towards the bottom of the meter.

Step 2:
Carefully pull straight out on the ribbon. The battery will pop out of the holder. Make sure to not let the battery fall to the ground.

ATTENTION
Do not incinerate or dispose of lithium batteries in general trash collection. They may explode or rupture violently. Check state and local regulations dealing with the disposal of these materials. You are legally responsible for hazards created while your battery is being disposed.

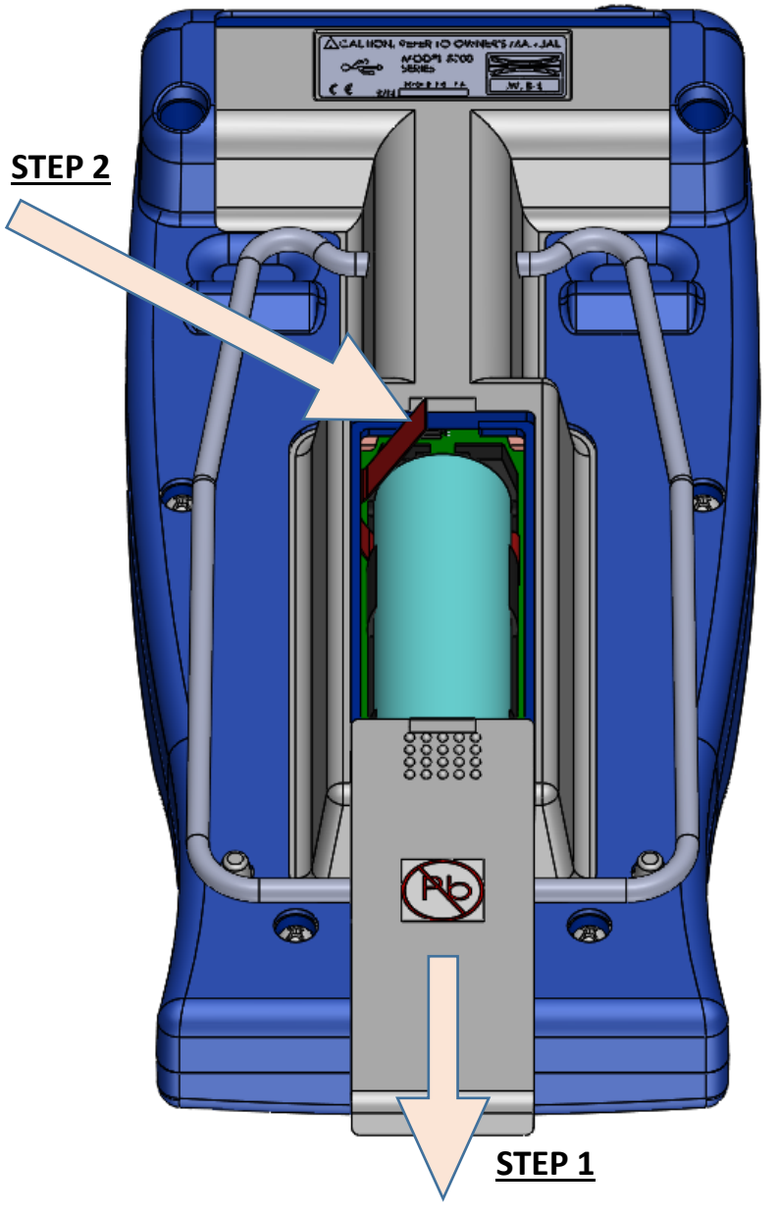

Figure 3-24
Battery Removal

Battery Installation

Only install the battery if it is safe to do so. Be sure the battery is not too warm to touch and there are no obvious signs of damage. Ensure the battery is installed with the correct polarity and handle the battery carefully.

Step 1:
With the battery cover off, make sure the ribbon is sitting across the empty battery holder with the free end available for removal.

Step 2:
Place the battery above the battery holder. Make sure the polarity is correct as shown in the figures.

Step 3:
Press the negative terminal (smooth flat side) into the holder to compress the spring.

Step 4:
Put pressure on the battery and quickly press in into place.

Step 5:
Place the battery cover back into position and press the end to slide it back in place.

NOTE: When battery power is used for the first time, momentarily apply USB power to the meter to activate the battery. This will need to be done any time the battery is disconnected and re-installed.

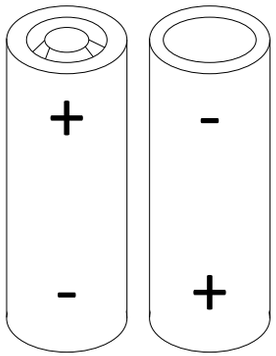

Figure 3-25
Battery Polarity

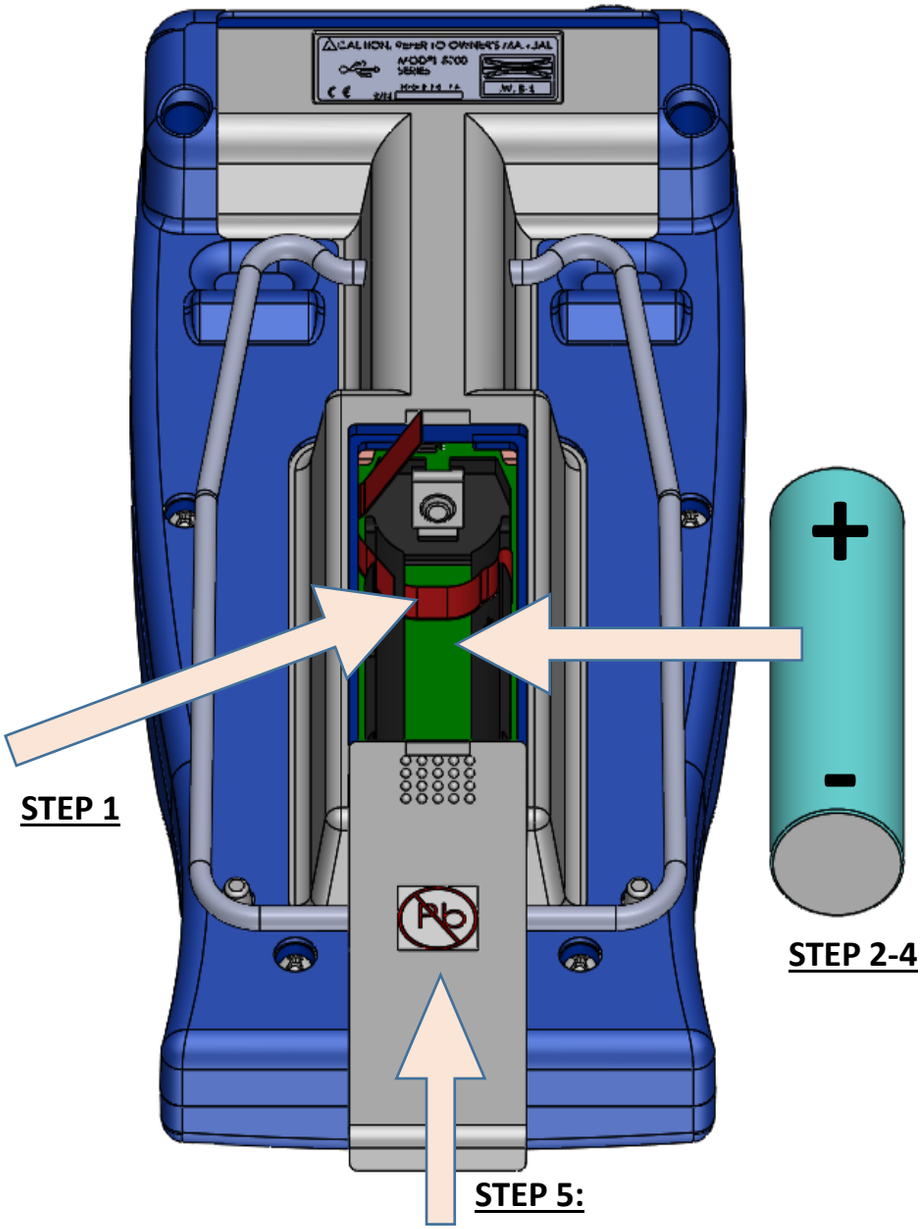

Figure 3-26
Battery Installation

Section 4
Remote Operation

USB INTERFACE CONNECTION

NOTE: Ensure that sleep mode is disabled prior to remote operation.

Prior to using the remote operation capability of the meter, the USB driver software must be installed on a computer. This software was supplied on the User's Manual CD for the meter, however newer software may be available. Please visit the F.W. Bell web site, to download the latest software for the 5200 series meters, and follow the instructions on the web site for installation.

REMOTE COMMAND STANDARDS

Prior to 1987, most instruments that featured RS232 communications interfaces had their own unique commands for exchanging information. Eventually some manufacturers began offering models that recognized other manufacturer's commands so that customers could easily switch over without making extensive changes to their programs.

The IEEE-488-1987.2 standard (also called "IEEE-488.2") was one step toward creating a universal way to communicate with any instrument, regardless of the manufacturer or the type of instrument used. This was later enhanced by the SCPI1991
Standard (Software Commands for Programmable Instruments), which defined specific commands and responses that covered a broad range of applications. Though these standards were targeted for use with the IEEE488 instrumentation bus, they are commonly used with serial (RS232) interfaces as well.

The meters support many of the IEEE-488-1987.2 "common" commands as well as a subset of the SCPI-1991 commands.

COMMAND FORMAT

All commands consist of ASCII character strings. Some commands contain numeric parameters that are used to set or reset individual bits within binary registers. For instance, a value of 45 decimal is the same as binary 101101, thus setting bits 5, 3, 2 and 0 in the register and resetting all others. Sending the value "00101101" would be interpreted as the number 101,101.

NOTE: No more than 500 characters can be sent in one command string.

ERROR BUFFER

Errors are generated by a variety of sources, such as hardware errors or errors in the command syntax. If an error occurs a message is stored in an ERROR BUFFER. The message can be retrieved by a specific command discussed later in this section.

STATUS REGISTERS

There are four register sets that indicate the status of the instrument, such as errors or the present state of the meter. These are 8bit registers, but in many cases not all of the bits are used. The four register sets are called

MEASUREMENT EVENT
OPERATION EVENT
STANDARD EVENT
QUESTIONABLE EVENT

There is also an 8-bit register that provides a 1-bit summary for each of the four register sets. This is called the STATUS BYTE. Each register set consists of three individual registers, as depicted in Figure 4-1.

1) The CONDITION register is a real time, read only register that is constantly updated to reflect current operating conditions.

2) The EVENT register is fed by the CONDITION register, but operates as a latch. Whenever any bit in the CONDITION register goes to “1”, a corresponding “1” is latched into the EVENT register and remains that way until cleared by a specific command.

3) The ENABLE register is a mask register that is used to generate the single status bit for the STATUS BYTE. Setting any bit in the ENABLE register to “1” will allow a corresponding “1” in the EVENT register to set the summary bit in the STATUS BYTE.

Information for Remote Operation of 5200 Gaussmeter

There are 2 DLL files which should be installed from the F.W. Bell website: libusb0.dll and usb5100.dll.

Note: These files allow communication with the 5200 by higher level programming languages such as various types of C, C++ or C#, VisualBasic or development programs like LabView, Agilent VEE, or TestPoint which can make calls to a DLL file. The function definitions are given near the bottom of this page.

There are 3 functions in the usb5100.dll you will need to call to communicate with the 5200.

1. The first is "openUSB5100" and returns a 4 byte integer (unsigned long in C) which is the USB handle for the device being communicated with. You may communicate with more than one 5200, but you will need to keep track of the handle for each unit because the handle must be passed to the other 2 functions when calling them.
Example: Call "**openUSB5100**" and it should return a value, for example 10203045 or some other number.

2. The second function is the one you will use to do all other communication, except for closing the session with the 5200.
It is **"**scpiCommand" and requires 4 arguments to be passed when calling.
   a. The USB ID number assigned when the device was opened initially. (the handle returned by openUSB5100)
   b. The SCPI command string. (the text string for the desired command as given in the user manual Remote Operation and SCPI command sections)
   c. Pointer to the object where you want the response returned to. (this should be a pointer to a string variable)
   d. Maximum response string length. Default is 80 and this should be good for most applications.
Example: **scpiCommand(102030405, *IDN?, pointer to ResponseString variable, 80)**

3. The third function will close the USB session with the 5200.
It is "closeUSB5100" and does not return anything.
Example: **closeUSB5100(102030405)**

Below are the function definitions for these:

FWB5180.h

```
// The following ifdef block is the standard way of creating macros which make exporting
// from a DLL simpler. All files within this DLL are compiled with the USB5100_EXPORTS
// symbol defined on the command line. this symbol should not be defined on any project
// that uses this DLL. This way any other project whose source files include this file see
// USB5100_API functions as being imported from a DLL, whereas this DLL sees symbols
// defined with this macro as being exported.
#ifdef USB5100_EXPORTS
#define USB5100_API __declspec(dllexport)
#else
#define USB5100_API __declspec(dllimport)
#endif
extern "C" USB5100_API unsigned int openUSB5100(void);
extern "C" USB5100_API void closeUSB5100(unsigned int fwb5000ID);
extern "C" USB5100_API int scpiCommand(unsigned int usbID,
char* cmd, char* result, int len);
```

Other General 5200 File Information

The basic calling sequence of executable and DLL files in the 5200 installation is as follows:

• PC5200.EXE is an executable application that provides the graphical meter interface on the computer's monitor. This may be useful for some simple remote monitoring applications etc., but is not very useful for integrating a 5200 into any sort of automated system or testing environment via any generic programming language. PC5200.EXE calls functions that are exported by lib5100.DLL.

• Lib5100.DLL exports a collection of .NET classes that handle the high level connection and display functions. It calls functions that are exported by usb5100.DLL. Note: File name was not updated to 5200, but it is compatible.

• Usb5100.DLL exports many functions that actually do the USB connection and communication with the 5200 meter. This is the DLL that provides the functions used by the test & calibration system during manufacture. It calls functions that are exported by libusb0.dll. The functions in this DLL should be able to be called by most higher level programming languages using the methods described earlier in this document. Note: File name was not updated to 5200, but it is compatible.

• Libusb0.DLL is part of the device driver package and exports very low-level generic USB access functions. These are not specific to the 5200.

STATUS BYTE AND REQUEST FOR SERVICE (RQS)

A bit in the STATUS BYTE called RQS (request for service) sets whenever an event occurs that requires the attention of the computer. The RQS bit can set if any of the summary bits from the MEASUREMENT EVENT, OPERATION EVENT, STANDARD EVENT or QUESTIONABLE EVENT registers are set, or if an error message exists. The STATUS ENABLE register is a mask register that is used to allow any of these conditions to set the RQS bit. Setting any bit in the STATUS ENABLE register to “1” will allow a corresponding “1” in the STATUS BYTE register to set the RQS bit. These registers are depicted in Figure 4-2.

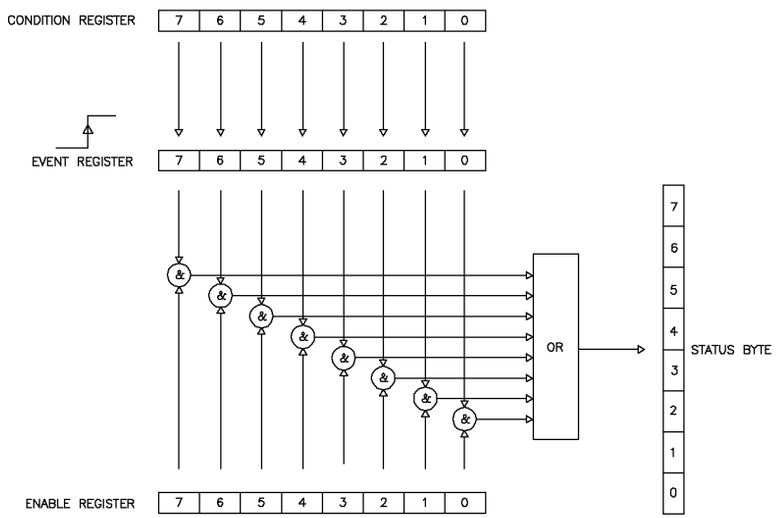

Figure 4-1
Condition, Event and Enable Registers

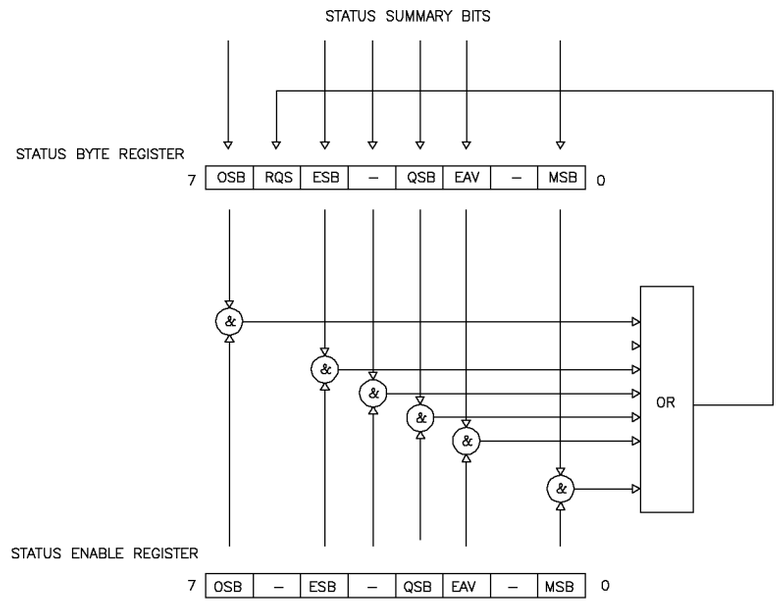

Figure 4-2
Status Byte and Enable Registers

OSB – Operation Summary Bit:
If any of the bits in the OPERATION EVENT register set, and their respective enable bits are set, the Operation Summary Bit (OSB) will set.

ESB – Event Summary Bit:
If any of the bits in the STANDARD EVENT register set, and their respective enable bits are set, the Event Summary Bit (ESB) will set.

QSB – Questionable Summary Bit:
If any of the bits in the QUESTIONABLE EVENT register set, and their respective enable bits are set, the Questionable Summary Bit (QSB) will set.

MSB – Measurement Summary Bit:
If any of the bits in the MEASUREMENT EVENT register set, and their respective enable bits are set, the Measurement Summary Bit (MSB) will set.

EAV – Error Available:
This bit sets any time there is an error message available in the error buffer.

RSQ – Request for Service:
If any of the other bits in the STATUS BYTE are set, and their respective enable bits are set in the STATUS ENABLE register, the Request for Service (RQS) will set.

STANDARD EVENT REGISTER

If any of these bits set, and their respective enable bits are set, the Event Summary Bit (ESB) will set in the STATUS BYTE.

7	6	5	4	3	2	1	0
PON	–	CME	EXE	DDE	–	–	OPC

Figure 4-3
Standard Event Registers

PON–Power On:
Indicates that the meter was turned off and on since the last communication.

CME – Command Error:
Indicates that there was a syntax or spelling error in the command, or the command received is not supported.

EXE – Execution Error:
Indicates that the meter detected an error while attempting to execute a command.

DDE – Device Dependent Error:
Indicates that the meter did not operate properly due to some internal error.

OPC – Operation Complete:
Indicates that all requested operations have been completed.

MEASUREMENT EVENT REGISTER
If any of these bits set, and their respective enable bits are set, the Measurement Summary Bit (MSB) will set in the STATUS BYTE.

7	6	5	4	3	2	1	0
–	–	–	–	RAV	–	–	ROF

Figure 4-4
Measurement Event Registers

ROF – Reading Overflow:
Indicates that the present reading exceeds the present measurement range.
RAV – Reading Available:
Indicates a reading was acquired and processed.

OPERATION EVENT REGISTER
If any of these bits set, and their respective enable bits are set, the Operation Summary Bit (OSB) will set in the STATUS BYTE.

7	6	5	4	3	2	1	0
–	–	–	MEAS	–	–	–	–

Figure 4-5
Operation Event Registers

MEAS – Measure mode:
Indicates the meter is in the process of acquiring and processing a reading.

QUESTIONABLE EVENT REGISTER
If any of these bits set, and their respective enable bits are set, the Questionable Summary Bit (QSB) will set in the STATUS BYTE.

7	6	5	4	3	2	1	0
CAL	–	–	–	–	–	–	–

Figure 4-6
Questionable Event Registers

CAL – Calibration summary:
Indicates that an invalid calibration constant was detected during power up or when the probe was installed. The instrument will instead use a default parameter. This bit will clear once the meter and probe have been successfully calibrated.

NOTE: Meter specifications are not guaranteed when the CAL bit is set!

“COMMON” COMMAND SYNTAX

The “common” commands are recognized and acted upon in a similar manner by all instruments that follow the IEEE488.2 standard, whether a DVM, scope, frequency meter, gaussmeter, etc. These are the syntax rules:

1) A common command always begins with an asterisk character (*) followed by a three or four-character acronym and possibly one other parameter. For instance, the command to clear the event registers is *CLS.

2) The commands are not case sensitive. For instance, the *CLS, *cls and *cLS commands are identical.

3) If there is a fourth character in the acronym, it will always be a question mark (?) and indicates that information is being requested from the instrument. For instance, a command to read the model number and manufacturer of the instrument is *IDN?.

4) If a parameter follows a command, it must be separated from the acronym by one space. The parameter is the ASCII representation of an integer. For instance, if the parameter to be sent is binary 1100, the actual parameter sent would be the two ASCII characters 12, since binary 1100 = decimal 12. If you were to send the four ASCII characters 1100 it would be interpreted as decimal 1100 (eleven hundred).

5) A number returned from the instrument is an ASCII representation of a number. For instance, if the instrument returns the ASCII string 345 the number is decimal 345 (three hundred forty-five), which translates to 159 hex.

6) Multiple commands can be sent in one string. The commands must be separated by semicolons (;). For instance, *CLS;*IDN? first clears the event registers and then requests model and manufacturer information. If more than one of the commands in the string requests information from the instrument, the instrument’s response will also have semicolons separating the responses, such as 345;0;10.

“COMMON” COMMANDS

ACRONYM	NAME	BRIEF DESCRIPTION
*CLS	Clear Status	Clear all event registers.
*ESE <NRf>	Program event enable	Program standard event enable register.
*ESE?	Event enable query	Read standard event enable register.
*ESR?	Event status query	Read standard event register & clear it.
*IDN?	Identification query	Return meter type and software version number.
*OPC	Set operation complete	Set the operation complete bit in the standard event register after all commands have been executed.
*OPC?	Operation complete query	Return an ASCII “1” after all commands have been executed.
*OPT?	Option identification query	Returns information about the attached Hall probe.
*SRE <NRf>	Program Status enable	Program STATUS enable register.
*SRE?	Status enable query	Read STATUS enable register.
*STB?	Status byte query	Read status byte register.

Table 4-1
Common command summary

***CLS –** CLEAR STATUS

Clears the MEASUREMENT EVENT, OPERATION EVENT, STANDARD EVENT and QUESTIONABLE EVENT registers, but not their enable registers.

***ESE <NRf> –** PROGRAM STANDARD EVENT ENABLE REGISTER

A set bit in the STANDARD EVENT ENABLE register allows its corresponding event to set the ESB (event summary bit) in the STATUS BYTE register. <NRf> is an ASCII string representing an integer mask. For instance, a value of 45 decimal is the same as binary 00101101, thus setting bits 5, 3, 2 and 0 in the enable register.

***ESE? –** STANDARD EVENT ENABLE REGISTER QUERY Returns the contents of the STANDARD EVENT ENABLE register.

***ESR? –** STANDARD EVENT REGISTER QUERY Returns the contents of the STANDARD EVENT register.

NOTE: The STANDARD EVENT register is cleared after an *ESR? command.

***IDN? –** IDENTIFICATION QUERY

Returns the following string: F.W.BELL, MODEL 5180,Rx.x. The Rx.x string is the firmware revision level, where x.x is a decimal number, such as 1.1.

***OPC –** SET OPERATION COMPLETE

Causes the OPC (operation complete) bit to set in the STANDARD EVENT register when all commands have been executed.

***OPC? –** IDENTIFICATION QUERY

Causes the OPC (operation complete) bit to set in the STANDARD EVENT register and returns an ASCII “1” when all commands have been executed.

***OPT? –** OPTION IDENTIFICATION QUERY

Returns a string that identifies the model number and serial number of the Hall probe. The model number will always be 12 characters in length including trailing spaces, such as STD580404. Following the model number will be a comma (,). Next will be the serial number, which will always be ten characters in length including trailing spaces, such as 0523004. If no probe is attached or can’t be identified, the string will default to “UNDEFINED ,0”.

***SRE <NRf> –** PROGRAM STATUS ENABLE REGISTER

A set bit in the STATUS ENABLE register allows its corresponding event to set the RQS (request for service) in the STATUS BYTE register. <NRf> is an ASCII string representing an integer mask. For instance, a value of 45 decimal is the same as binary 00101101, thus setting bits 5, 3, 2 and 0 in the enable register.

***SRE? –** STATUS ENABLE REGISTER QUERY returns the contents of the STATUS ENABLE register.

***STB? –** STATUS BYTE QUERY returns the contents of the STATUS BYTE register.

NOTE: The STATUS BYTE register is not cleared after an *STB? command.
Other registers and buffers must be cleared for the bits in the STATUS BYTE register to be cleared.

SCPI COMMAND SYNTAX

The SCPI commands go one step farther than IEEE488.2 and provide a language protocol and defines a standard set of commands to program most aspects of the instrument. These are the syntax rules:

1) The first character of any command string is a colon (:).

2) The commands are not case sensitive. For instance, the :MEASURE, :measure and :MEASure commands are identical.

3) A question mark (?) in a command means that the command is requesting information from the instrument. This is called a query command.

4) For any command, there is a short and long spelling of the command. Use the following rules for the short version:

a) If the length of the command is four letters or less, there is no short version.

b) If the command has more than four letters and the fourth letter is a vowel, drop it and all letters that follow it. For instance, the command :RESET can be shortened to :RES.

c) If the command has more than four letters and the fourth letter is a consonant, drop all letters that follow it. For instance, the command :MEASURE can be shortened to :MEAS.

d) If the command contains a question mark (?) or a non-optional parameter it must be included after the short form version. For instance, a query command of :CONDITION? can be shortened to :COND?.

e) The use of anything other than the short or long version of a command is not permitted. For instance, both the :MEASURE and :MEAS commands are acceptable, but :MEASU is not.

5) **If a parameter follows a command, it must be separated from the command by one space.**

6) Multiple commands can be sent in one string. The commands must be separated by semicolons (;). A colon (:) must still precede each command. If more than one of the commands in the string requests information from the instrument, the instrument's response will also have semicolons separating the responses, such as 345;0;10.

SCPI COMMANDS

In the following discussion, the commands are written such that the short form of the command is written in UPPER CASE letters and the remainder of the command is written in lower case letters.

Either form can be used.

If parameters are required, they will appear within <> brackets in this document. Brackets are not part of the actual command string.
An <n> parameter is a single ASCII digit. <NRf> is usually a multiple digit number. The meter supports a subset of the available SCPI commands. However, there are some functions that are not supported with standard SCPI commands. In these cases, these special commands are patterned after other SCPI commands that are similar in function.

SPCI Commands continued on next page

ERROR MESSAGE COMMANDS	DESCRIPTION
:SYSTem:ERRor?	Retrieve error message
:SYSTem:CLEar	Clear error message

STATUS REGISTER COMMANDS	DESCRIPTION
:STATus:MEASurement:EVENt?	Query Measurement Event reg.
:STATus:OPERation:EVENt?	Query Operation Event reg.
:STATus:QUEStionable:EVENt?	Query Questionable Event reg.
:STATus:MEASurement:ENABle <NRf>	Program Measurement Event Enable reg.
:STATus:OPERation:ENABle <NRf>	Program Operation Event Enable reg.
:STATus:QUEStionable:ENABle <NRf>	Program Questionable Event Enable reg.
:STATus:MEASurement:ENABle?	Query Measurement Event Enable reg.
:STATus:OPERation:ENABle?	Query Operation Event Enable reg.
:STATus:QUEStionable:ENABle?	Query Questionable Event Enable reg.
:STATus:MEASurement:CONDition?	Query Measurement Condition reg.
:STATus:OPERation:CONDition?	Query Operation Condition reg.
:STATus:QUEStionable:CONDition?	Query Questionable Condition reg.
:STATus:PRESet	Clear all enable registers.

Table 4-2
SCPI Commands

MODE COMMANDS	DESCRIPTION
:UNIT:FLUX:AC:GAUSs	Program ac gauss units
:UNIT:FLUX:AC:TESLa	Program ac tesla units
:UNIT:FLUX:AC:AM	Program ac ampere per meter units
:UNIT:FLUX:DC:GAUSs	Program dc gauss mode
:UNIT:FLUX:DC:TESLa	Program dc tesla units
:UNIT:FLUX:DC:AM	Program dc ampere per meter units
:UNIT:FLUX?	Query flux units setting

RANGE COMMANDS	DESCRIPTION
:SENSe:FLUX:RANGe:AUTO	Program auto range
:SENSe:FLUX:RANGe <n>	Program fixed range
:SENSe:FLUX:RANGe?	Query range setting

HOLD COMMANDS	DESCRIPTION
:SENSe:HOLD:STATe <n>	Program hold mode
:SENSe:HOLD:STATe?	Query hold mode setting
:SENSe:HOLD:RESet	Reset held value

ZERO/RELATIVE COMMANDS	DESCRIPTION
:SYSTem:AZERo	Initiates an automatic zero operation
:SYSTem:ARELative:STATe <n>	Program relative mode
:SYSTem:ARELative:STATe?	Query relative mode setting

MEASUREMENT COMMANDS	DESCRIPTION
:MEASure:FLUX?	Obtain flux density reading.

ANALOG OUTPUT COMMANDS	DESCRIPTION
:SYSTem:OUT <n>	Enable / disable analog output

Table 4-2
SCPI Commands

ERROR MESSAGES AND COMMANDS

If an error occurs, a message is placed in the SCPI error buffer. The message will contain a number, a comma (,) and a brief description of the error. Negative () numbers are used for SCPI defined messages while positive (+) numbers relate specifically to the meter.

Each time the buffer is read, the next error message is returned and then removed from the SCPI buffer. If no error exists, the message “0, No error” will be returned.

There are certain error status bits that will set in the STANDARD EVENT register. These bits provide general error indications. The error message will provide more detailed information about the errors.

The SCPI error buffer can be read and cleared with the following commands:

:SYSTem:ERRor?

Returns the next error message and removes it from the SCPI error buffer.

:SYSTem:CLEar

Removes all messages from the SCPI error buffer.

If the meter detects an error in the command string (a spelling error, a command that is not supported or a numerical value that is incorrect), the meter will not execute the command. If the error is detected in the middle of a multiple command string, the command that contains the error and all commands that follow will not be executed. The user’s program should always check the STATUS BYTE to determine if an error has occurred.

ERROR CODE LIST

0,	NO ERROR
-201,	NOT IN MEASURE MODE
-120,	NUMERIC DATA ERROR
-224,	ILLEGAL PARAMETER ERROR
-363,	INPUT BUTTER OVERRUN
-103,	INVALID SEPARATOR
-102,	SYNTAX ERROR
-100,	COMMAND ERROR
3,	INVALID METER CAL DATA
40,	UNABLE TO READ PROBE CAL DATA
43,	INVALID PROBE CAL DATA
44,	INVALID PROBE CAL DATA
45,	INVALID PROBE CAL DATA
51,	UNKNOWN ERROR
52,	UNKNOWN ERROR
53,	UNKNOWN ERROR
54,	UNKNOWN ERROR
98,	METER CALIBRATION ERROR
99,	METER CALIBRATION ERROR
60,	METER CALIBRATION ERROR
61,	METER CALIBRATION ERROR
62,	METER CALIBRATION ERROR
63,	METER CALIBRATION ERROR
64,	METER CALIBRATION ERROR
65,	METER CALIBRATION ERROR
66,	METER CALIBRATION ERROR
67,	METER CALIBRATION ERROR

STATUS COMMANDS

The STATUS commands control and query the MEASUREMENT EVENT, OPERATION EVENT and QUESTIONABLE EVENT registers.

:STATus:MEASurement:EVENt?
:STATus:OPERation:EVENt?
:STATus:QUEStionable:EVENt?

Returns the contents of the specified EVENT register, then clears the register contents.

:STATus:MEASurement:ENABle <NRf>
:STATus:OPERation:ENABle <NRf>
:STATus:QUEStionable:ENABle <NRf>

Programs the specified EVENT ENABLE register with the value <NRf>. <NRf> is an ASCII string representing an integer mask. For instance, a value of 45 decimal is the same as binary 00101101, thus setting bits 5, 3, 2 and 0 in the enable register.

:STATus:MEASurement:ENABle?

:STATus:OPERation:ENABle?
:STATus:QUEStionable:ENABle?

Returns the contents of the specified EVENT ENABLE register.

:STATus:MEASurement:CONDition?
:STATus:OPERation:CONDition?
:STATus:QUEStionable:CONDition?

Returns the contents of the specified EVENT CONDITION register. The EVENT CONDITION register is a realtime register reflecting the state of the meter at the time of the read. Some conditions could happen very quickly and could be missed by this query. It is often better to rely on the contents of the EVENT register since it latches the event until cleared by a specific command.

:STATus:PRESet

Clears all ENABLE registers.

MODE COMMANDS

These commands select readings in either GAUSS, TESLA or AMP-METERS, and flux density readings for either static fields (dc) or alternating fields (ac). See Section 3 for more information.

:UNIT:FLUX:AC:GAUSs

Specifies ac flux density readings in gauss.

:UNIT:FLUX:AC:TESLa

Specifies ac flux density readings in tesla.

:UNIT:FLUX:AC:AM

Specifies ac flux density readings in amp-meters.

:UNIT:FLUX:DC:GAUSs

Specifies dc flux density readings in gauss.

:UNIT:FLUX:DC:TESLa

Specifies dc flux density readings in tesla.

:UNIT:FLUX:DC:AM

Specifies dc flux density readings in amp-meters.

:UNIT:FLUX?

Returns an ASCII string representing the present mode setting for the meter.
The ASCII string can be DC GAUSS, AC GAUSS, DC TESLA, AC TESLA, AC AM or DC AM.

RANGE COMMANDS

These commands select either a fixed range or AUTO range. See Section 3 for more information.

:SENSe:FLUX:RANGe:AUTO

Selects the AUTO RANGE function.

:SENSe:FLUX:RANGe <n>

Selects a fixed range <n>, where n =

0 for 300 G / 30 mT / 23.88 kA/m

1 for 3 kG / 300 mT / 238.8 kA/m

2 for 30 kG / 3 T / 2388 kA/m

:SENSe:FLUX:RANGe?

Returns an ASCII digit representing the present range setting for the meter, as follows:

0 for 300 G / 30 mT / 23.88 kA/m

1 for 3 kG / 300 mT / 238.8 kA/m

2 for 30 kG / 3 T / 2388 kA/m

HOLD COMMANDS

These commands select one of the HOLD modes or resets the presently held reading. See Section 3 for more information.

:SENSe:HOLD:STATe <n>

Selects the HOLD function, where <n> is a single ASCII digit, as follows:

0 = All HOLD modes turned off.

1 = MIN HOLD on.

2 = MAX HOLD on.

3 = PEAK HOLD on.

:SENSe:HOLD:STATe?

Returns an ASCII digit representing the present HOLD mode setting, as follows:

0 = All HOLD modes turned off.

1 = MIN HOLD on.

2 = MAX HOLD on.

3 = PEAK HOLD on.

:SENSe:HOLD:RESet

This command resets the presently held reading.

ZERO COMMAND
This command initiates an automatic ZERO operation. See Section 3 for more information.

:SYSTem:AZERo

Automatic zeroing is initiated upon receipt of this command.

RELATIVE COMMANDS
These commands control the RELATIVE function. See Section 3 for more information.

:SYSTem:ARELative:STATe <n>

The relative function is turned off when <n> is 0. When <n> is 1 the relative function is turned on, using the previously generated relative value, if any. When <n> is 2, the relative function is turned on and an automatic relative operation is initiated.

:SYSTem:ARELative:STATe?

Returns a single ASCII digit indicating the on / off state of the relative function. A 0 indicates the relative function is turned off. A 1 indicates the relative function is turned on.

MEASUREMENT COMMAND
This command acquires a new flux density reading.

:MEASure:FLUX?

This command returns the latest flux density reading. The returned string will contain a signed real number and a unit indicator (G, T, or Am). If in the ac mode the reading will not contain a polarity character (+ or –).
The ranges of possible readings for the various units of measure are:

0.0G to 29990G
0.00000T to 2.999T
0Am to 2,388,000Am

ANALOG OUTPUT COMMAND

This command enables or disables the ANALOG OUTPUT. See Section 3 for more information.

:SYSTem:OUT <n>

Enables or disables the ANALOG OUTPUT, where <n> is a single ASCII digit, as follows:

0 = Analog output turned off.

1 = Analog output turned on.

2 = Analog output turned on.

Note: "2" is an obsolete argument but still supported for backward compatibility with customer's existing software.

INTERMIXING "COMMON" AND SCPI COMMANDS

As mentioned earlier, a string sent to the instrument can contain more than one command as long as the commands are separated by semicolons(;). "Common" and SCPI commands can be intermixed. For instance, the string:

***CLS;:UNIT:FLUX:DC:TESLA;:MEASure:FLUX?**

is valid, first clearing the instrument's event and error registers, then programming it to supply readings in tesla in the dc mode and requesting the latest reading. The host system should be prepared to receive the reading immediately after transmitting this command string to the meter.

USING QUERY COMMANDS

When any query command is issued, the meter will send its response back immediately. However, if a query command is part of a multiple command string the meter will transmit the response after all commands within the string have been executed. For instance, here is such a string:

:UNIT:FLUX:DC:GAUSS;:MEAS:FLUX?;:UNIT:FLUX:DC:TESLA;:MEAS:FLUX?

In this string, the meter is programmed for DC GAUSS mode and a measurement is requested. Then the meter is programmed for DC TESLA mode and another measurement is requested. When the meter has finished executing the entire command string, it will transmit a string similar to this: +1892G;+0.1892T.

USING THE OPERATION COMPLETE STATUS

There are several ways to determine if the meter has executed a command. If the command string contains a query command, the program can simply wait for the meter to transmit its response. But, if the query command contains an error, the command may never be executed. Further, some commands do not require a response. The best way to handle all situations is to issue the *OPC? command once prior to sending any other commands. This will cause the meter to always transmit an ASCII “1” each time it executes a command string. If the command string contains one or more query commands, the “1” will be appended to the end of the response separated by a semicolon (;). For instance, the response to the command string

***OPC?;:UNIT:FLUX:AC:GAUSS**

would be “1”, whereas the response to a command string containing a query

***OPC?;:MEAS:FLUX?**

might be “+221.3G;1

PC5200.exe – Remote PC Control with Pre-made Program (1)

Downloading PC5200
To download PC5200, go to https://fwbell.com/resources/software-downloads/ and download PC5200. Once the zip file finishes downloading, open the file named PC5200_Installer_v2, then open the file named Volume, then run the application named setup.

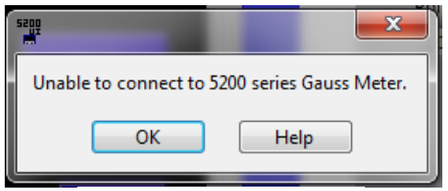

Figure 4-7
PC5200 Connection Issue Error Box

Starting the Program
In order to start the PC5200 program, the 5200 series Gaussmeter USB C port must be connected to the computer's USB A or USB C port and the cable must support data transfer and not just charging only. The computer must also have the correct driver installed. The device should show up in device manager as a libusb-win32 USB Device, if it doesn't see the help instructions mentioned below.

If an attempt to launch the program is made and no device is detected, Figure 4-7 will appear, then the program will close. For help troubleshooting connection issues, click the help button of the error pop-up window.

If a 5200 series Gaussmeter is connected to the computer when PC5200 is launched, Figure 4-8 will appear, with a live display of the Gaussmeter's current reading, range, hold mode, analog output mode, and relative mode, as well as interactive buttons allowing the user to change the Gaussmeter's operational settings. To the right, there is also an interactive Logging box (Figure 4-9) that allows the user to create a log of the Gaussmeter's readings over time.

Figure 4-8
PC5200 Interface

Changing Modes
The PC5200 interface is designed to replicate the actual Gaussmeter's interface.

Range - Pressing the Range button moves the program through the 4 range options, with the current range appearing in the status box.

AC/DC – Pressing the button labeled AC or DC will toggle the Gaussmeter's current mode. When the box displays DC, the Gaussmeter is in DC mode. When the box displays AC, the Gaussmeter is in AC mode.

Units - Pressing the Units button moves the program through the 3 units options, with the current units appearing in the reading box to the right of the current reading. G or kG indicates Gauss mode, mT or T indicates Tesla mode, and kA/m indicates A/m mode.

Analog Output – Pressing the Analog Output button toggles the Analog Output on/off, with the current mode indicated in the status box.

Hold – Pressing the Hold button moves the program through the 4 hold options, with the current hold option appearing in the status box.

Auto Relative – Pressing the Auto Relative button toggles Auto Relative mode on/off, with the current mode indicated in the status box.

PC5200.exe – Remote PC Control with Pre-made Program (2)

Auto Zero – Pressing the Auto Zero button causes the meter to interpret the current DC flux density as 0 G/T/kA/m. (See Section 3-13, Automatic Zero Function).
Note: This operation can take about 10 seconds to complete.

Reset Hold – Pressing the Reset Hold button causes the meter to forget the current hold value when in a Hold mode (Min, Max, Peak).

Note: If you change the Gaussmeter's range using the Gaussmeter while the program is running, that change won't be reflected in the program's status box. However, the reading box will still display the correct number and units. All other changes made using the Guassmeter while PC5200 is running should be reflected in the program.

Logging
PC5200 also has the capability to create a CSV file log of the Gaussmeter's readings.

Log File - Use the Log File dialog box to select or create the file you wish to log to.

Polling Interval (seconds) - Select a polling interval (in seconds) using either the up-down arrows or by typing in the desired polling interval.

View Data – Turning this option on will cause a pop-up screen to appear when logging is turned on. This file displays the 27 most recent data points written to the log file.
Note: If you turn View Data off after logging begins, the pop-up screen will no longer update. However, new data will still be written to the selected log file.

Log On/Off - Press the On/Off button at the bottom to begin recording data. When the button glows green, data is being recorded.
Note: Opening the Log file while the program is attempting to write data will interfere with the program, and potentially result in the loss of data. Please use the View Data option to view current data while the program is logging.

Note: Changing the Log File and/or Polling Interval while the program is logging is fine. It won't disrupt the program or data collection.

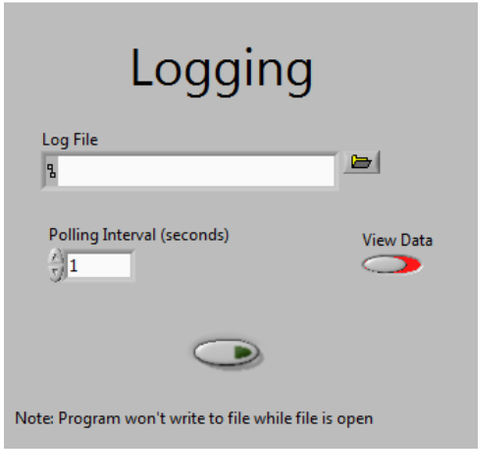

Figure 4-9
PC5200 Logging Interface

MODEL 5200 ERROR CODES THAT MAY BE DISPLAYED IF THERE IS A PROBLEM

Error Code	Error Buffer Text	Description of Error	Possible Problem
003	A03: Meter data CRC	Invalid calibration data	Meter not calibrated or data corrupt
040	A40: Probe read	Probe EPROM read error	Probe EPROM missing or defective
043	A43: Probe CRC 1	Probe CRC failed	Probe EPROM defective
044	A44: Probe hi current	Incorrect probe current	Probe EPROM error or meter malfunction
045	A45: Probe CRC 2	Probe CRC failed	Probe EPROM not programmed
051	A51: Probe status cmd CRC	Probe status cmd CRC error	Probe EPROM defective
052	A52: Probe status msg CRC	Probe status msg CRC error	Probe EPROM defective
053	A53: Probe page cmd CRC	Probe page cmd CRC error	Probe EPROM defective
054	A54: Probe page data CRC	Probe page data CRC error	Probe EPROM defective
098	A98: Probe data timeout	Probe data timeout	Internal meter error
099	A99: Cal data timeout	Calibration data timeout	Internal meter messaging / reset problem
060	D60: A/D	ADC error	Internal meter problem
061	D61: A/D zero	AD zero error	Internal meter problem
062	D62: Chip comm	PIC-DSP com error	Internal meter problem
063	D63: Offset D/A	DAC offset error	Internal meter problem
064	D64: I hall D/A	Probe current error	Broken probe or meter problem
065	D65: Output D/A	Output DAC error	Internal meter problem
066	D66: Gain	Amplifier gain error	Internal meter problem
067	D67: High input res	High input resistance	Broken probe or meter problem

Most errors result from a damaged probe. If an error code related to a probe problem appears, substitute another probe if one is available to help determine if the probe may be defective.

WARRANTY

The warranty and terms of sale for this instrument may be accessed at:

https://www.parker.com/parkerimages/Parker.com/About%20Us/Terms%20and%20Conditions/Terms-OfferOfSale-Languages/English/Parker%20As%20Seller/Offer_of_Sale.pdf

Contact

Authorized distributor:

Magnetic Sciences Inc
367 Arlington St.
Acton, MA 01720
USA

Tel: +1 (978) 266-9355
www.magneticsciences.com